Husqvarna®

SPARE PARTS LIST

CHAIN SAWS

550 XP/XPG

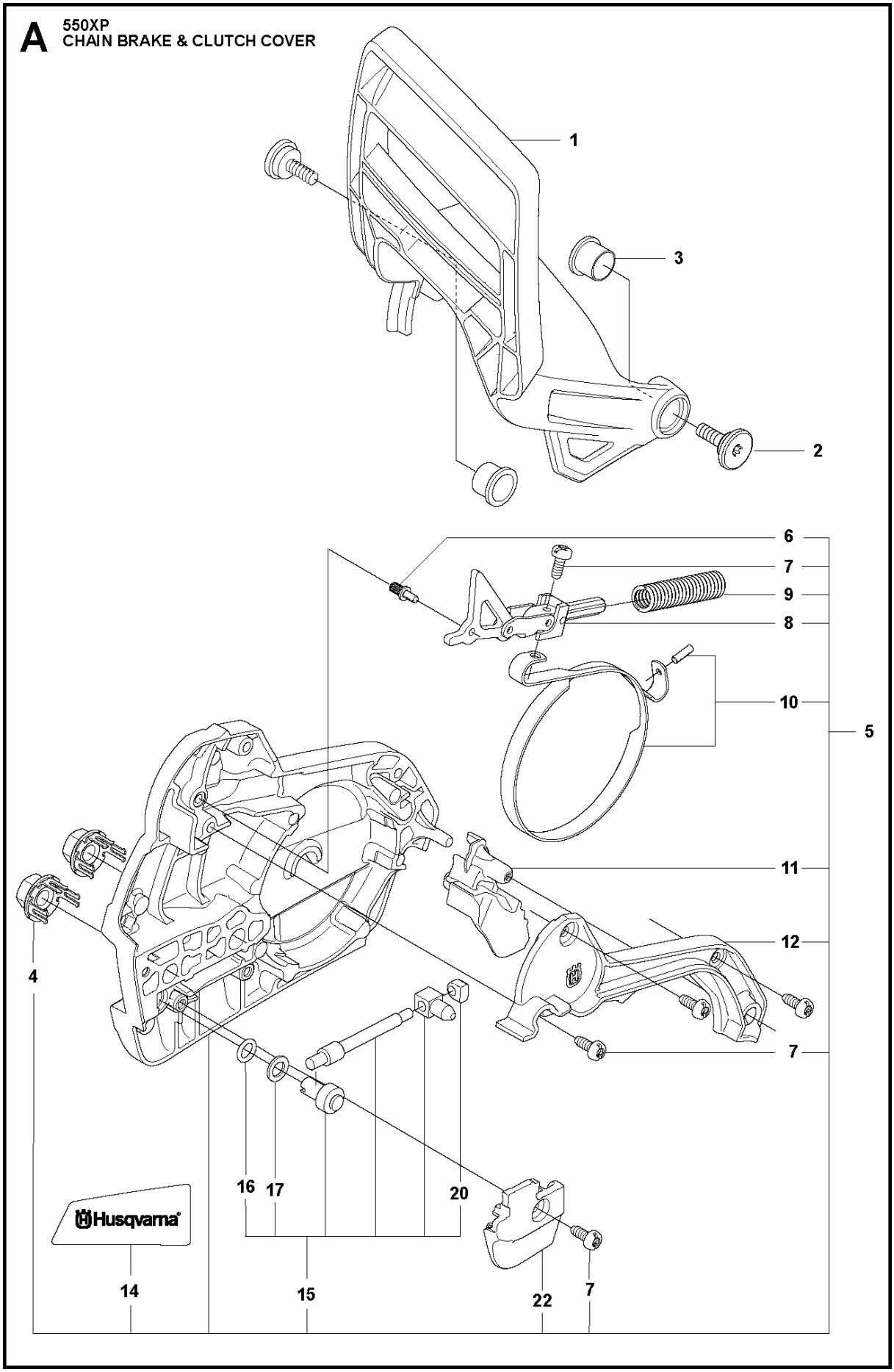
A
550XP
CHAIN BRAKE & CLUTCH COVER
1
3
2
6
7
9
8
10
5
11
12
4
7
16
17
20
Husqvarna
14
15
22
7

Ref	Part No	Description	Remark	QTY	KIT
1	522 67 75-01	HAND GUARD		1	
2	526 83 45-01	SCREW		2	
3	577 78 02-01	BUSHING		2	
4	505 19 73-01	NUT		2	
5	505 19 90-05	CLUTCH COVER ASSY		1	
6	503 75 18-01	PIN		1	5
7	526 22 18-01	SCREW CITXPANT		5	5
8	505 19 93-01	KNEE JOINT ASSY		1	5
9	503 90 83-01	BRAKE SPRING		1	5
10	505 19 95-02	BRAKE BAND ASSY		1	5
11	505 20 16-01	GUARD		1	5
12	505 19 97-01	COVER		1	5
14	523 05 80-01	LABEL		1	5
15	575 26 04-03	CHAIN TENSIONER KIT		1	5
16	740 48 07-02	O-RING		1	15, 5
17	503 23 00-63	WASHER		1	15, 5
20	537 01 74-01	BEARING SLEEVE		1	15, 5
22	505 19 98-01	CHAIN GUIDE		1	5

B 550XP
CLUTCH & OIL PUMP

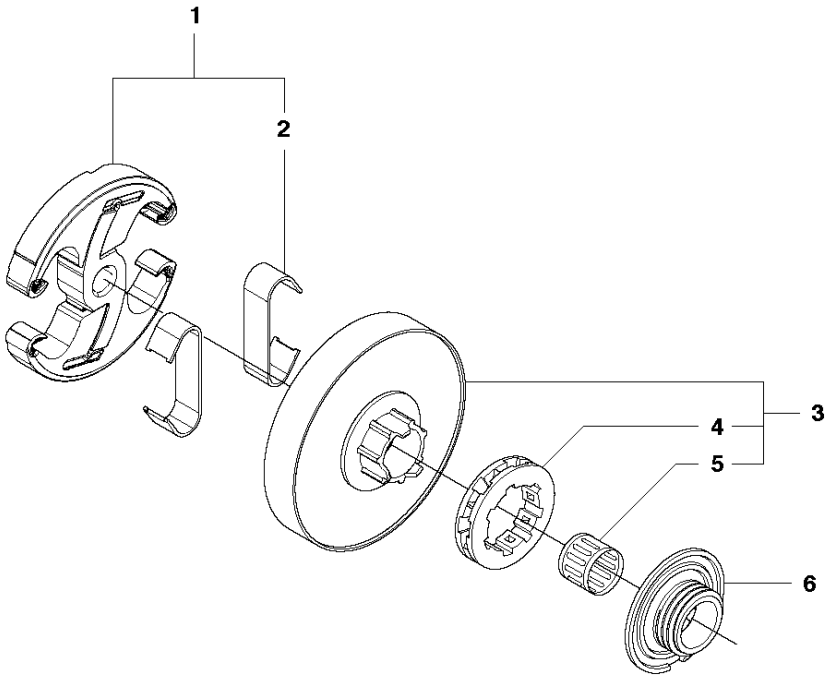

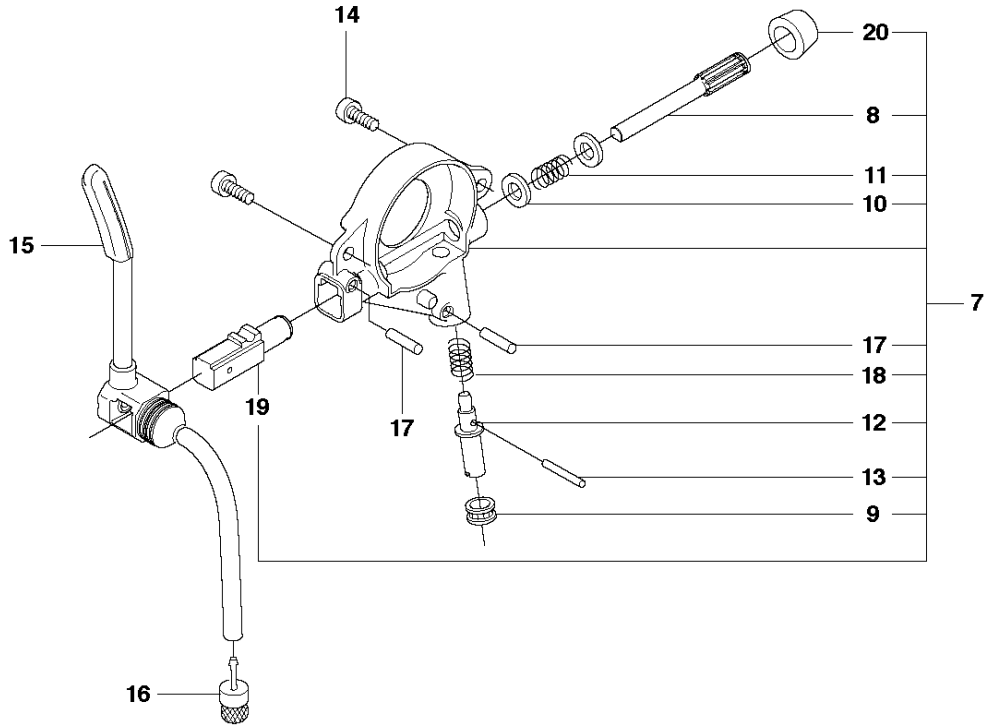

Ref	Part No	Description	Remark	QTY	KIT
1	577 51 82-01	CLUTCH ASSY		1	
2	537 35 91-01	CLUTCH SPRING		2	1
3	575 26 10-05	CLUTCH DRUM ASSY	".325""x7"	1	
4	501 45 74-02	RIM	".325""x7"	1	3
5	503 25 34-01	NEEDLE BEARING		1	3
6	505 20 08-01	WORM WHEEL		1	
7	505 19 99-04	OIL PUMP ASSY		1	
8	505 20 02-01	PUMP PISTON		1	7
9	505 20 03-01	CASING		1	7
10	503 23 00-60	WASHER		2	7
11	503 89 16-01	SPRING		1	7
12	505 15 70-01	ADJUSTMENT SCREW		1	7
13	721 11 64-30	GROOVED PIN		1	7
14	526 81 81-01	SCREW ITXSCM		2	
15	505 20 04-01	OIL HOSE		1	
16	504 71 00-03	OIL PLUMMET		1	
17	720 12 33-00	PARALLEL PIN		2	7
18	503 89 15-01	SPRING		1	7
19	505 20 01-01	PUMP CYLINDER		1	7
20	503 62 49-01	SEALING PLUG		1	7

C 550XP CYLINDER COVER

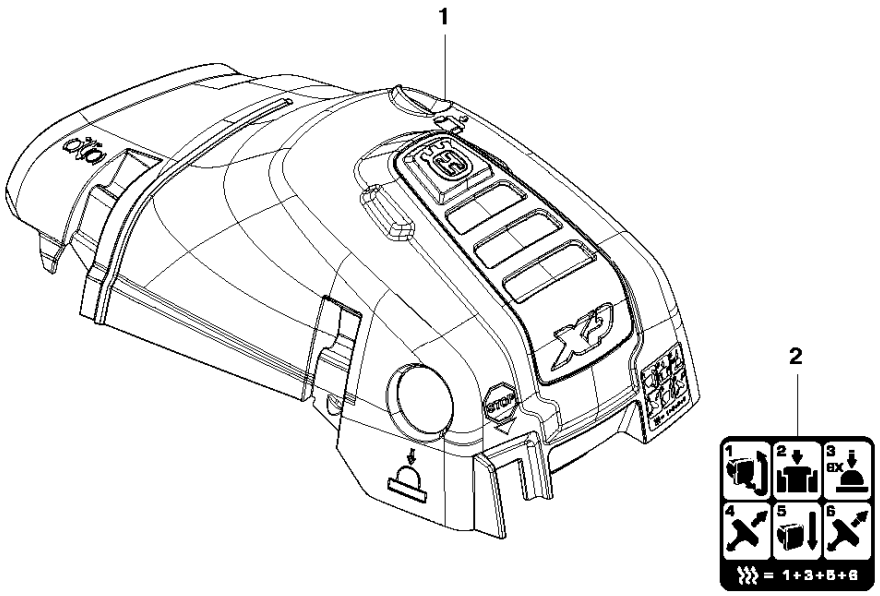

Ref	Part No	Description	Remark	QTY	KIT
1	587 24 86-03	CYLINDER COVER ASSY		1	
2	587 14 95-01	LABEL		1	1

D 550XP
CYLINDER PISTON

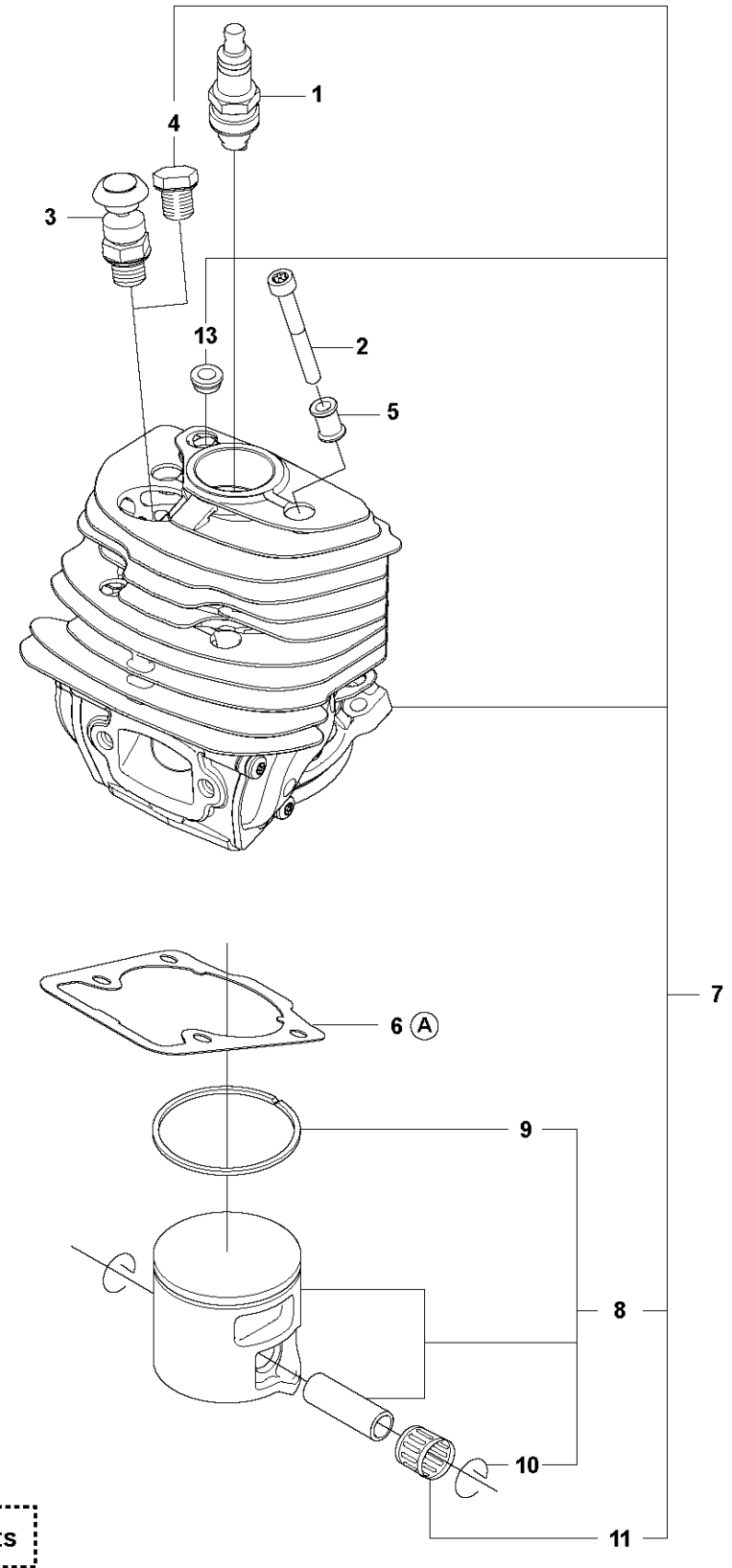

Ref	Part No	Description	Remark	QTY	KIT
1	574 51 96-01	SPARK PLUG		1	
2	582 39 27-01	SCREW		4	
3	575 27 69-01	DECOMPRESSION VALVE		1	
4	503 55 22-01	PLUG		1	
5	576 71 76-02	SLEEVE		4	
6	525 31 58-01	GASKET		1	12
7	577 76 47-07	CYLINDER ASSY		1	
8	577 04 70-08	PISTON ASSY		1	7
9	577 95 83-01	PISTON RING		1	8, 7
10	737 44 10-00	SNAP RING		2	8, 7
11	503 25 63-02	NEEDLE BEARING		1	7
12	577 76 66-03	GASKET KIT	A=Set of gaskets - Up to s/n 20181900169	1	
12	577 76 66-04	GASKET KIT	A=Set of gaskets From s/n 20181900170	1	
13	520 29 11-01	BUSHING			7

E **550XP**
CRANKSHAFT

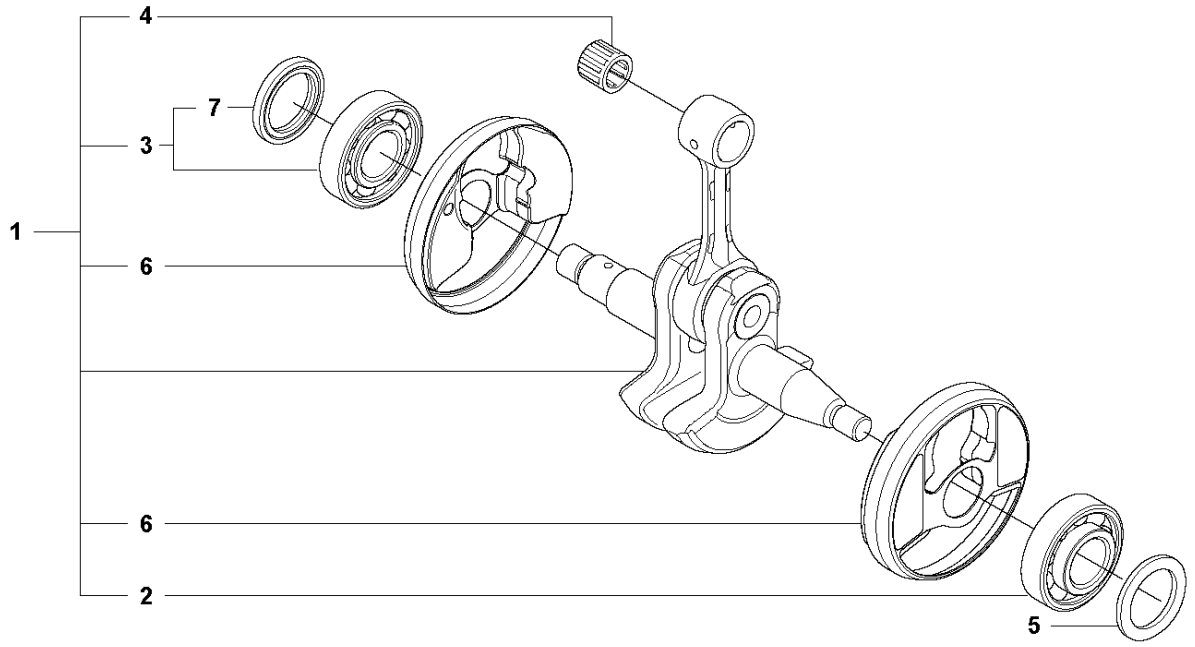

Ref	Part No	Description	Remark	QTY	KIT
1	577 76 73-09	CRANKSHAFT ASSY		1	
2	505 13 35-03	BALL BEARING		1	1
3	525 43 42-03	BALL BEARING		1	1
4	503 25 63-02	NEEDLE BEARING		1	1
5	525 39 12-01	RADIAL SEAL		1	
6	522 73 77-01	CUP		2	1
7	505 41 61-01	RADIAL SEAL		1	1, 3

F **550XP**
MUFFLER

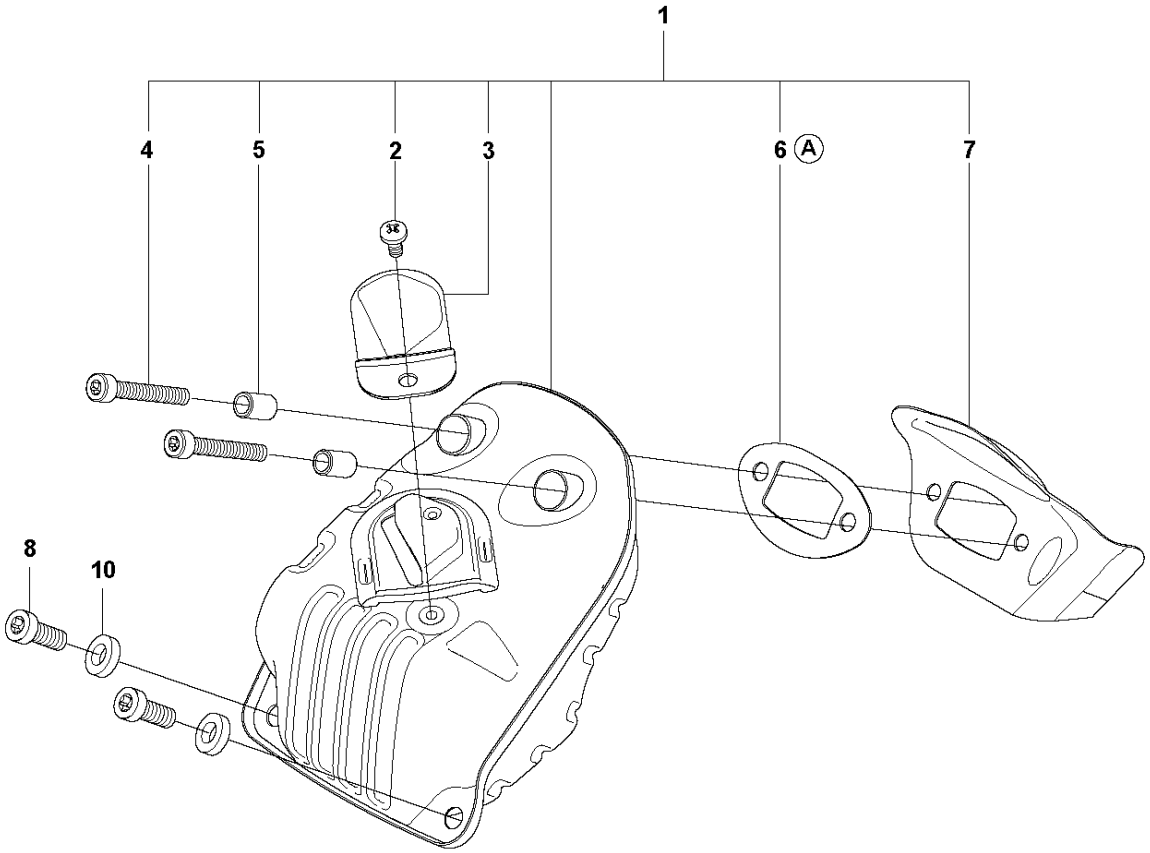

9

Ⓐ Set of gaskets

Ref	Part No	Description	Remark	QTY	KIT
1	523 05 26-04	MUFFLER KIT		1	
2	724 12 87-59	SCREW CRPANM		1	1
3	576 89 02-01	SPARK ARRESTER		1	1
4	525 82 51-04	SCREW ITXSCM		2	1
5	577 65 63-01	SLEEVE		2	1
6	523 05 24-01	GASKET		1	1, 9
7	523 05 25-01	HEAT DEFLECTOR		1	1
8	525 76 25-01	SCREW ITXSCM		2	
9	577 76 66-03	GASKET KIT	A=Set of gaskets - Up to s/n 20181900169	1	
9	577 76 66-04	GASKET KIT	A=Set of gaskets From s/n 20181900170	1	
10	577 90 22-01	WASHER		1	

G 550XP
CARBURETOR & AIR FILTER

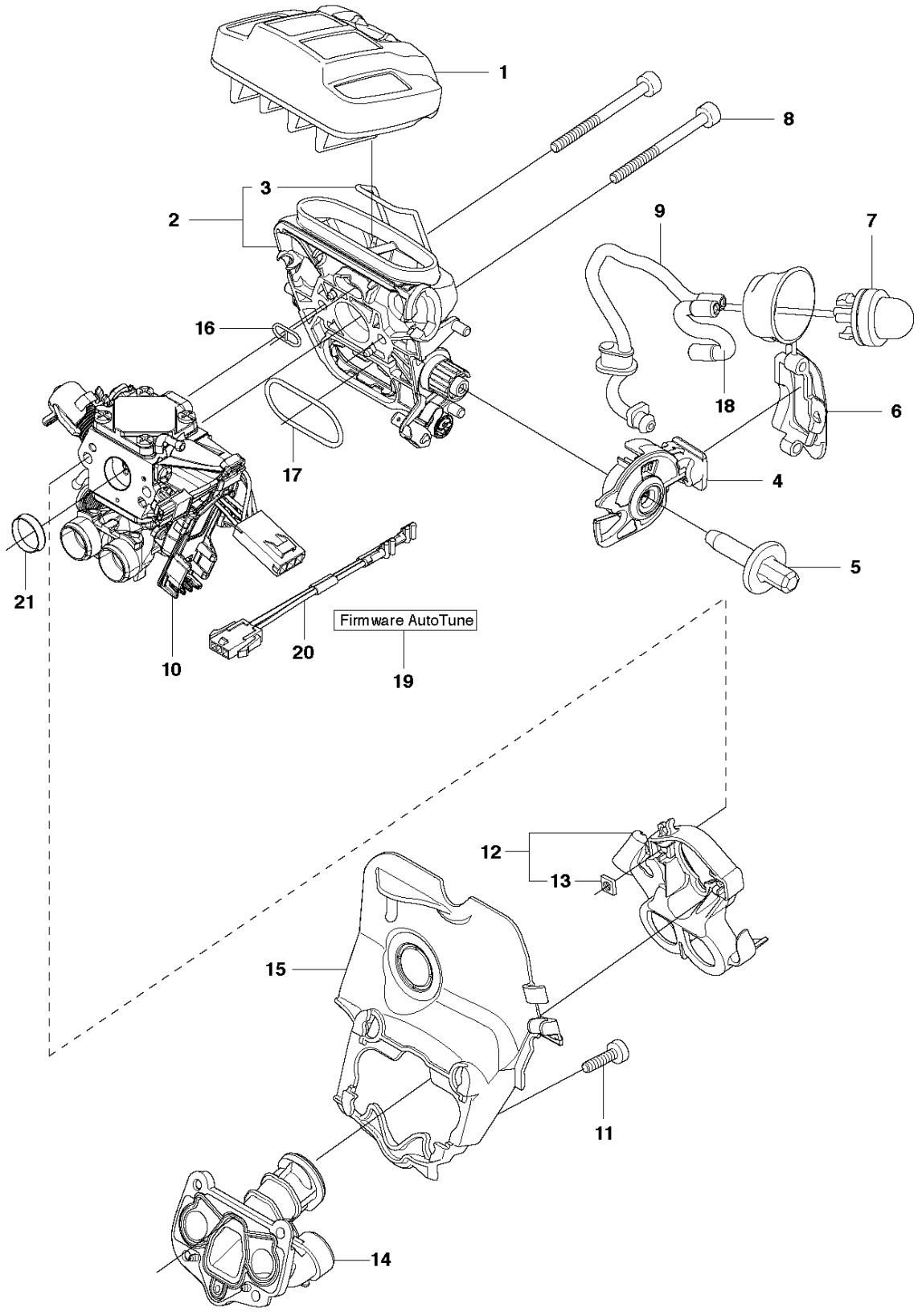

Ref	Part No	Description	Remark	QTY	KIT
1	522 67 54-04	AIR FILTER ASSY	NYLON 80 µm black	1	
1	522 67 54-05	AIR FILTER ASSY	NYLON 44 µm yellow	1	
1	522 67 54-06	AIR FILTER ASSY	FELT white	1	
1	522 67 54-07	AIR FILTER ASSY	NYLON 25 µm orange	1	
2	574 19 89-03	FILTER HOLDER ASSY	XP	1	
2	574 19 89-04	FILTER HOLDER ASSY	XPG	1	
3	522 90 73-01	SHACKLE		1	2
4	510 01 72-02	CHOKE CONTROL ASSY		1	
5	505 15 62-01	SCREW		1	
6	525 58 81-01	SEALING		1	
7	503 93 66-01	PURGE		1	
8	574 35 35-03	SCREW ITXSCM		2	
9	587 64 54-04	VENTILATING HOSE	From s/n 20153900097	1	9
9	589 35 71-01	VENTILATING HOSE	Up to s/n 20153900096	1	
10	587 08 48-06	CARBURETTOR KIT	AT-12	1	
11	526 81 81-01	SCREW ITXSCM		4	
12	523 06 40-02	FLANGE		1	
13	503 22 65-03	SQUARE NUT		2	12
14	525 50 00-03	INLET PIPE ASSY		1	
15	522 95 10-01	INTERMEDIATE WALL		1	
16	525 61 92-01	SEALING		1	
17	525 61 90-01	SEALING		1	
18	523 05 68-01	FUEL HOSE		1	
19	.	TBD	Download from your local supportsite	1	
20	577 53 64-01	WIRING ASSY		1	
21	585 19 50-01	SUPPORT SLEEVE		1	10

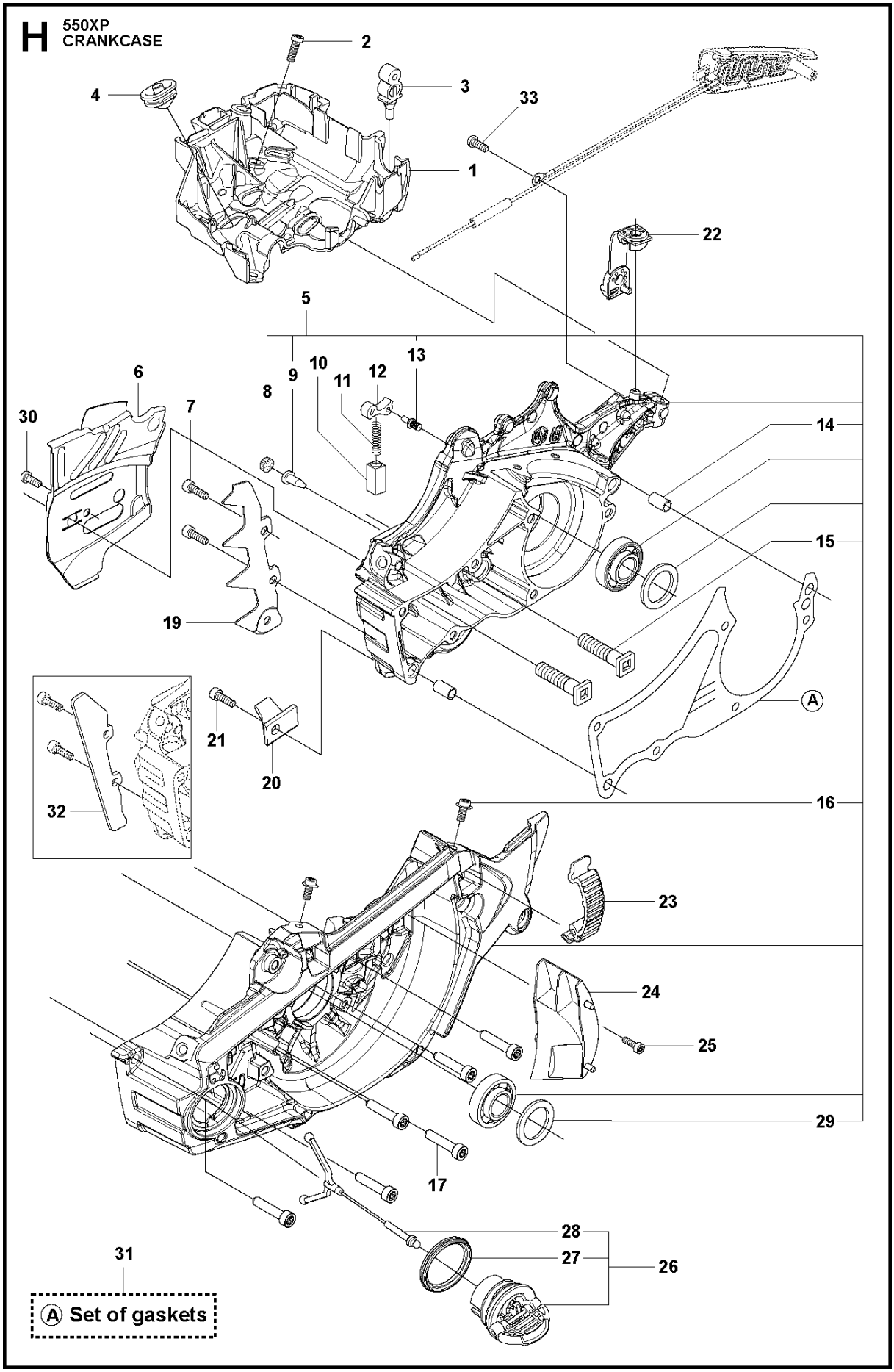
H
550XP
CRANKCASE
1
2
3
4
5
6
7
8
9
10
11
12
13
14
15
16
17
19
20
21
22
23
24
25
26
27
28
29
30
31
32
33
A
A Set of gaskets

Ref	Part No	Description	Remark	QTY	KIT
1	525 40 32-01	CARBURETTOR		1	
2	525 75 52-02	SCREW ITXSCFM		4	
3	503 86 93-01	SUPPORT		2	
4	581 55 92-01	BELLOWS		1	
5	577 83 47-13	CRANKCASE ASSY		1	
6	522 74 28-01	CHAIN GUIDE PLATE		1	
7	575 79 35-01	SCREW ITXPANM		2	
8	537 40 35-01	FILTER		1	5
9	530 02 61-19	CHECK VALVE		1	5
10	537 21 07-01	SPRING GUIDE		1	
11	503 43 65-01	POSITION SPRING		1	
12	505 20 12-01	CATCH		1	
13	503 75 18-01	PIN		1	5
14	501 27 08-01	GUIDE BUSHING		2	5
15	505 21 73-01	BAR BOLT		2	5
16	525 82 44-01	SCREW ITXSCM		2	5
17	575 84 11-04	SCREW ITXSCM		6	
19	578 40 05-01	SPIKE		1	
20	537 37 79-02	CHAIN CATCHER		1	
21	525 79 81-03	SCREW ITXSCFT		1	
22	505 12 58-01	DEFLECTION LIMITER		1	
23	503 89 47-03	SNAP LOCKING		3	
24	588 05 92-01	AIR NOZZLE		1	
25	526 81 81-01	SCREW ITXSCM		1	
26	577 87 86-03	TANK CAP ASSY		1	
27	589 24 13-01	GASKET		1	26
28	503 57 89-01	HOLDER		1	26
29	525 39 12-01	RADIAL SEAL		1	5
30	525 88 74-01	SCREW CITXPANT		1	
31	577 76 66-03	GASKET KIT	A=Set of gaskets - Up to s/n 20181900169	1	
31	577 76 66-04	GASKET KIT	A=Set of gaskets From s/n 20181900170	1	
32	577 88 72-01	ENCLOSED KIT		1	
33	526 22 18-01	SCREW CITXPANT		1	

J 550XP
FUEL TANK

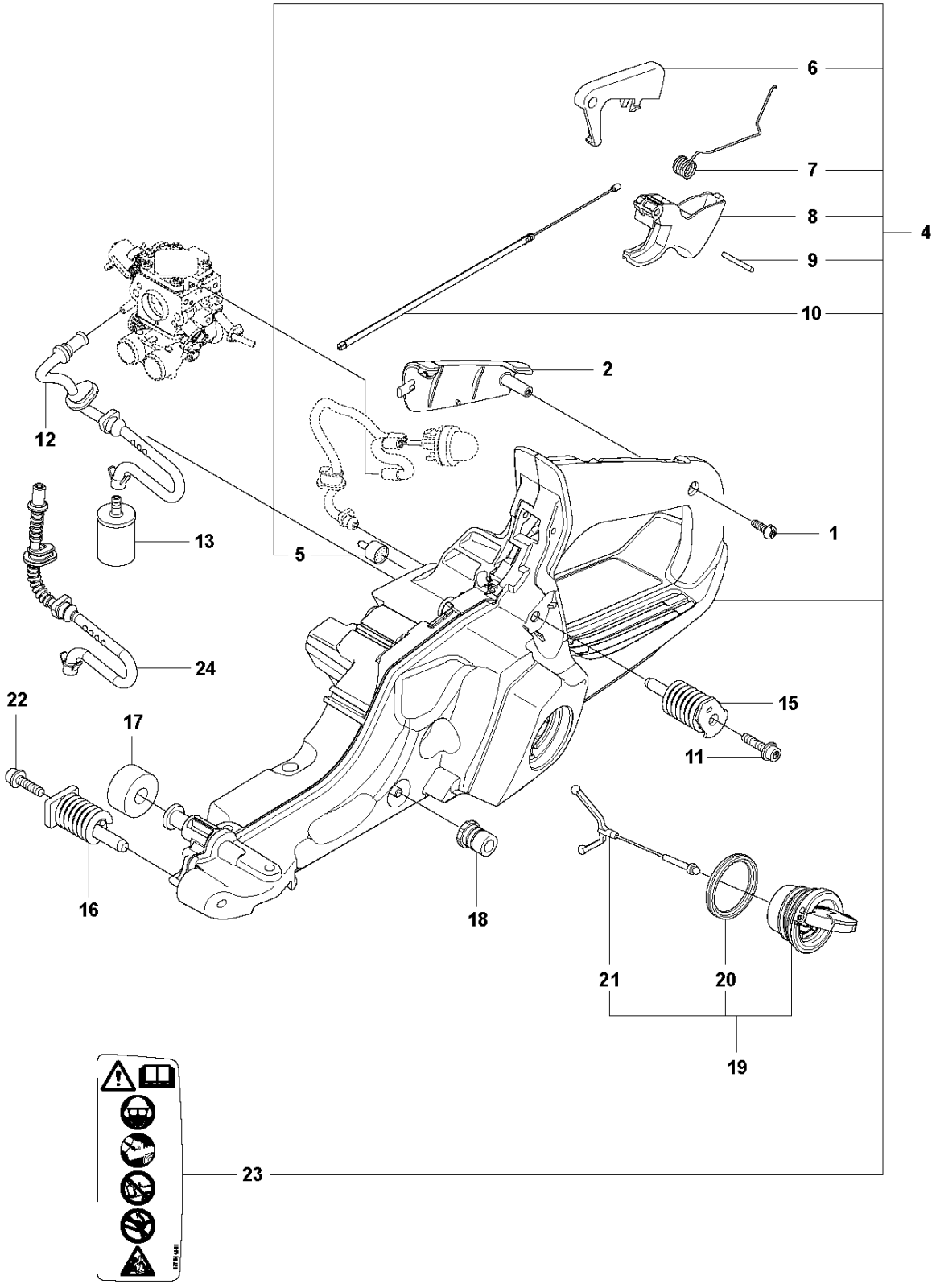

Ref	Part No	Description	Remark	QTY	KIT
1	525 88 74-01	SCREW CITXPANT		1	
2	504 10 63-01	HANDLE INSERT		1	
4	577 79 02-03	FUEL TANK ASSY		1	
5	501 15 29-01	TANK VENT ASSY		1	4
6	544 09 98-01	THROTTLE LOCKOUT		1	4
7	544 09 99-01	SPRING		1	4
8	505 15 77-01	THROTTLE		1	4
9	720 18 25-20	PARALLEL PIN		1	4
10	579 48 24-01	THROTTLE CABLE ASSY		1	4
11	525 79 81-02	SCREW ITXSCFT		1	
12	573 99 35-03	FUEL HOSE	Up to AT-7A	1	
13	503 44 32-01	FUEL FILTER		1	
15	578 22 74-03	ANTIVIBRATION ELEMENT		1	
16	505 12 87-02	ANTIVIBRATION ELEMENT		1	
17	523 08 55-01	DEFLECTION LIMITER		1	
18	501 00 76-01	SUPPORT		1	
19	522 62 00-03	TANK CAP ASSY		1	
20	589 24 11-01	GASKET		1	19
21	503 57 89-01	HOLDER		1	19
22	525 79 81-03	SCREW ITXSCFT		1	
23	577 84 43-01	DECAL		1	4
24	577 50 41-01	FUEL HOSE	From AT-12	1	

K1 550XP HANDLES

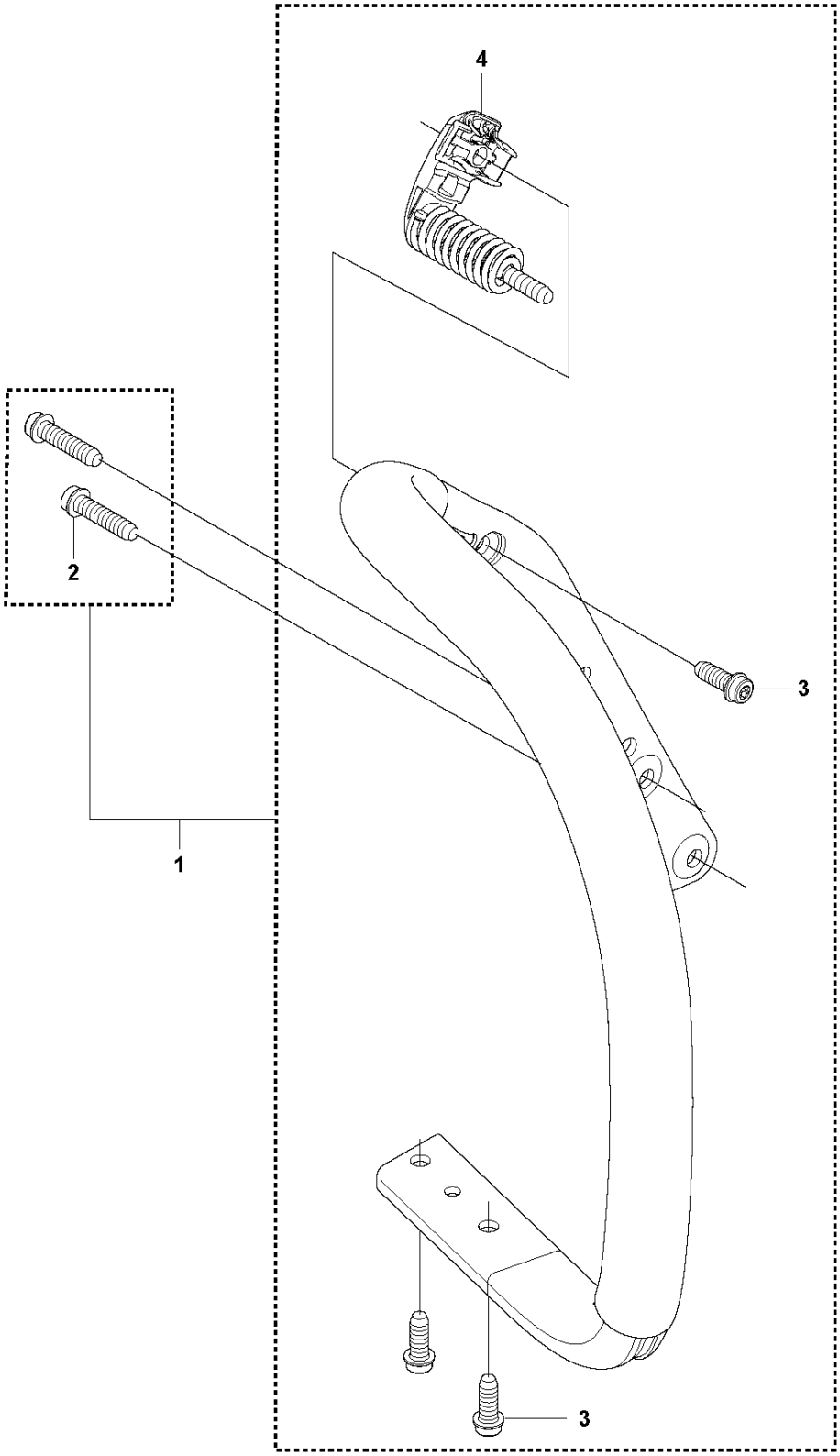

Ref	Part No	Description	Remark	QTY	KIT
1	577 79 82-03	FRONT HANDLE		1	
2	525 79 81-03	SCREW ITXSCFT		2	1
3	525 79 81-01	SCREW ITXSCFT		4	1
4	522 95 15-07	ANTIVIBRATION ELEMENT		1	1

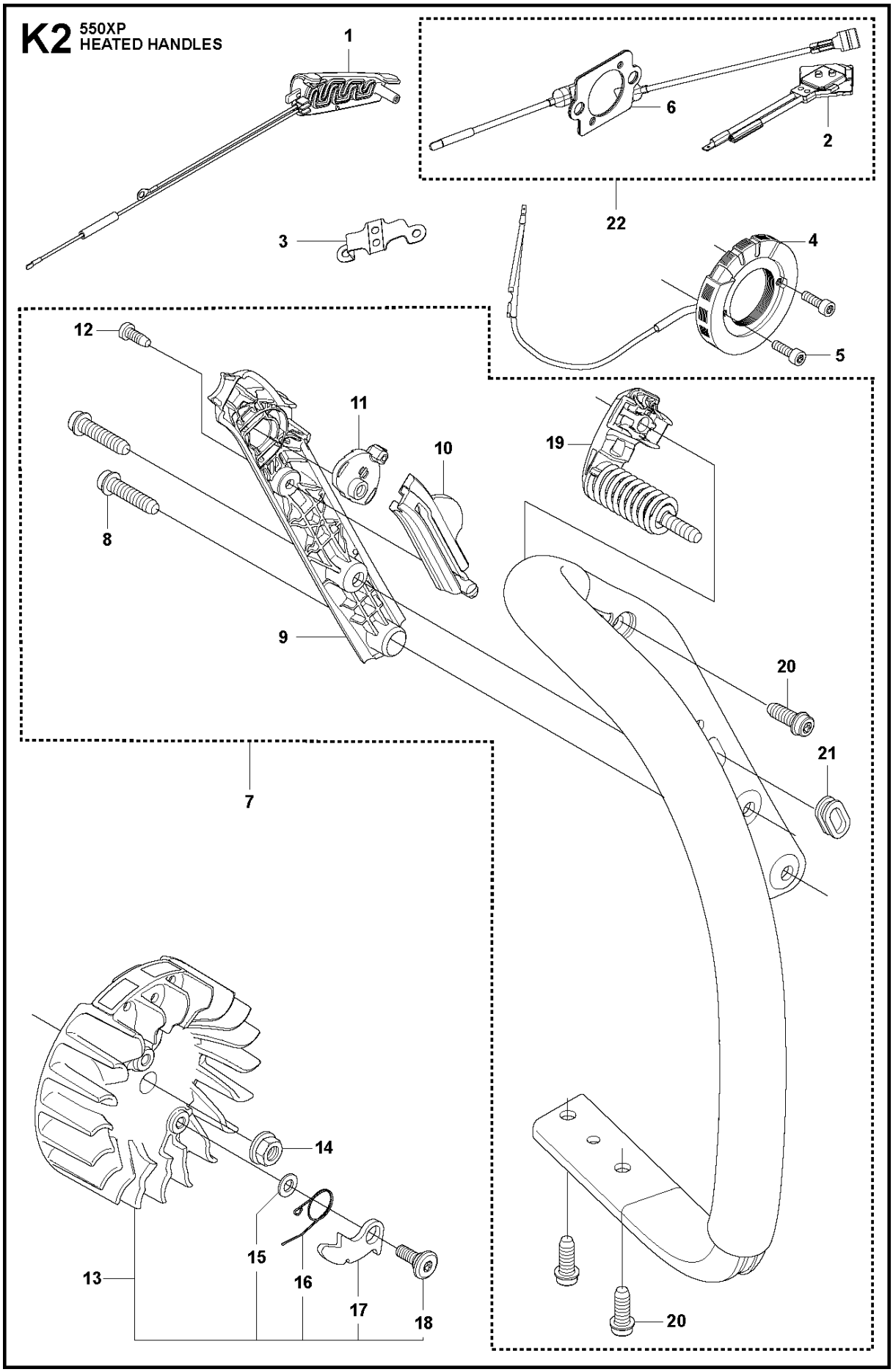
K2
550XP
HEATED HANDLES
1
6
2
22
3
4
5
12
11
10
19
8
9
20
21
7
14
15
16
17
18
13
20

Ref	Part No	Description	Remark	QTY	KIT
1	522 74 19-02	HANDLE INSERT		1	
2	522 66 58-01	THERMOSTAT ASSY		1	22
3	537 21 08-01	RETAINER		1	
4	522 61 14-02	GENERATOR STATOR		1	
5	526 81 81-02	SCREW ITXSCM		2	
6	588 16 86-02	FOIL ELEMENT		1	22
7	577 79 82-04	FRONT HANDLE		1	
8	525 79 81-03	SCREW ITXSCFT		2	7
9	523 34 85-03	COVER		1	7
10	523 34 84-01	CONTACT PLATE		1	7
11	537 25 25-01	CONTACT PLATE		1	7
12	525 88 74-01	SCREW CITXPANT		1	7
13	522 93 78-04	FLYWHEEL ASSY		1	
14	503 22 04-01	NUT		1	
15	503 23 00-42	WASHER		2	13
16	501 67 35-01	SPRING		2	13
17	501 67 32-01	PAWL		2	13
18	506 00 69-01	SCREW		2	13
19	522 95 15-07	ANTIVIBRATION ELEMENT		1	7
20	525 79 81-01	SCREW ITXSCFT		4	7
21	537 08 83-01	GROMMET		1	7
22	582 82 96-01	THERMOSTAT ASSY	Up to s/n 20164200001	1	

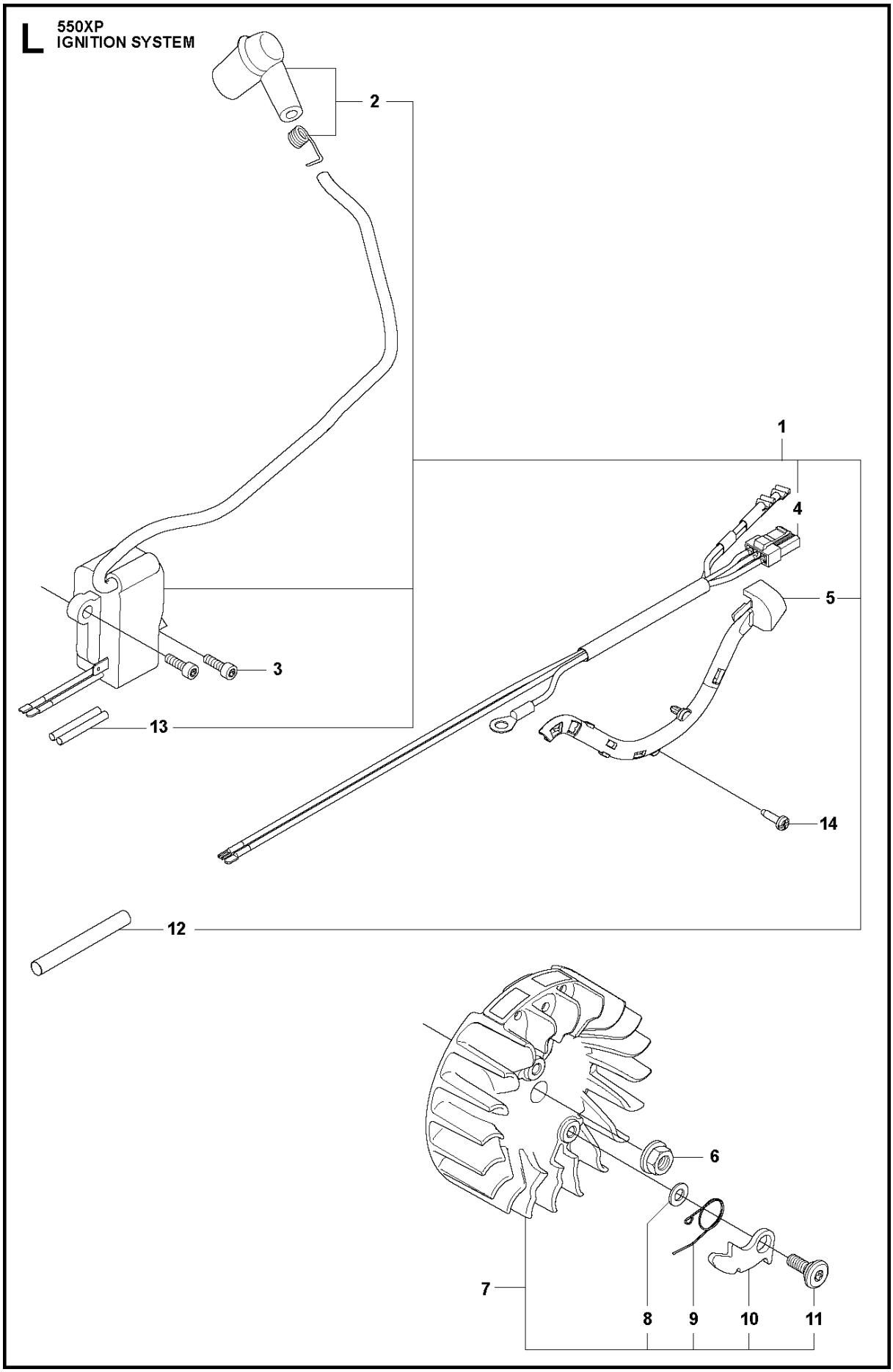
L
550XP
IGNITION SYSTEM
2
1
4
5
3
13
14
12
6
7
8
9
10
11

Ref	Part No	Description	Remark	QTY	KIT
1	581 72 36-02	IGNITION MODULE ASSY		1	
2	501 48 54-04	SPARK PLUG CAP ASSY		1	1
3	525 75 52-03	SCREW ITXSCFM		2	
4	577 96 76-02	WIRING ASSY		1	1
5	529 29 26-01	CABLE HOLDER		1	1
6	503 22 04-01	NUT		1	
7	522 93 78-03	FLYWHEEL ASSY		1	
8	503 23 00-42	WASHER		2	7
9	501 67 35-01	SPRING		2	7
10	501 67 32-01	PAWL		2	7
11	506 00 69-01	SCREW		2	7
12	504 04 35-05	CABLE COVER		1	1
13	503 23 85-01	SHRINKAGE HOSE		2	1
14	525 88 74-01	SCREW CITXPANT		1	

M 550 XP, 550 XPG
STARTER

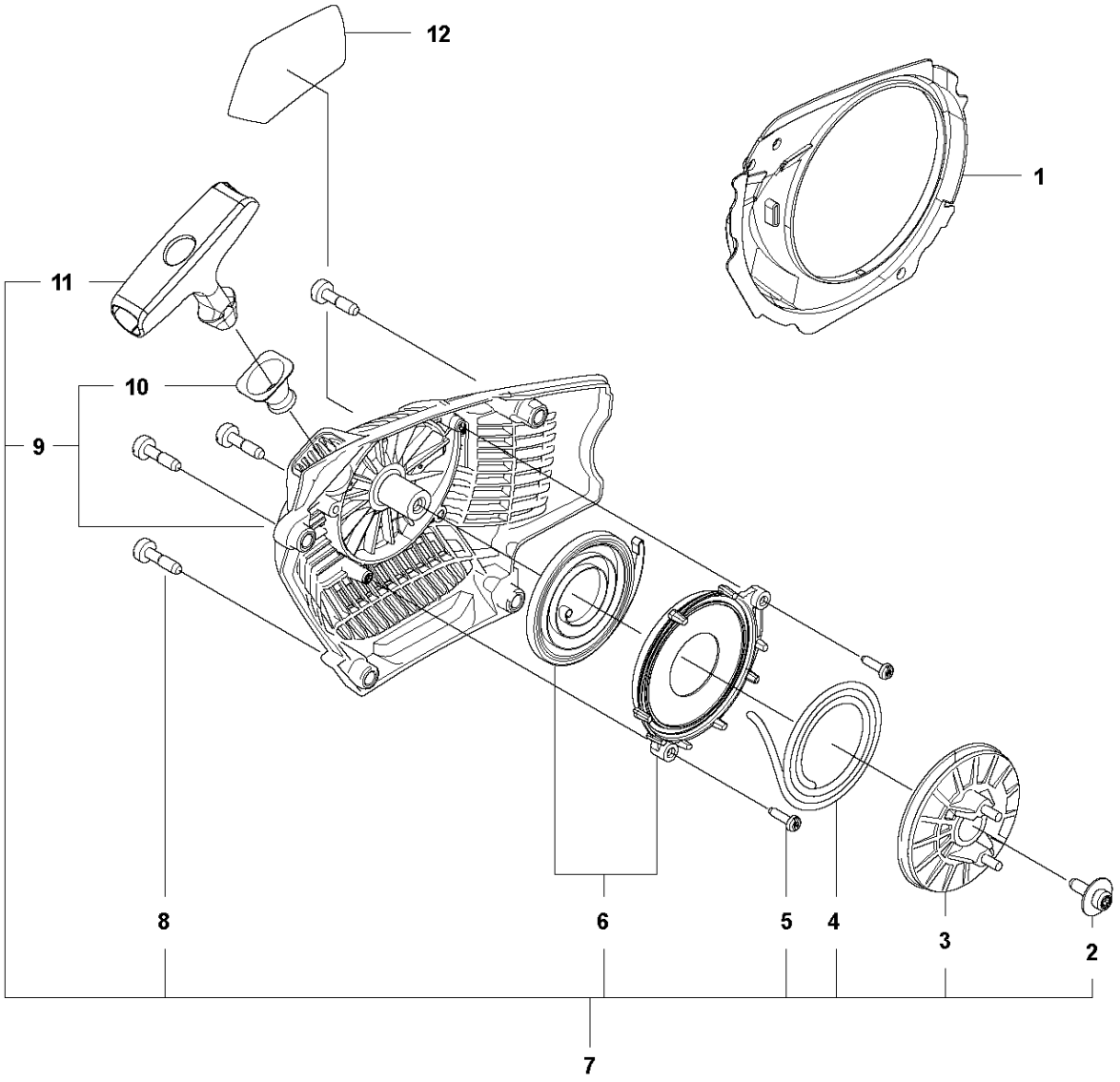

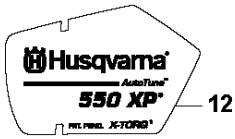

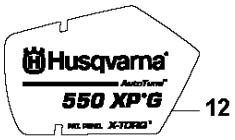

Ref	Part No	Description	Remark	QTY	KIT
1	522 79 62-01	AIR CONDUCTOR		1	
2	576 35 66-01	SCREW ITXSCT		1	7
3	505 15 81-01	STARTER PULLEY ASSY		1	7
4	505 30 51-25	STARTER CORD		1	7
5	525 88 74-01	SCREW CITXPANT		2	7
6	505 15 79-01	SPRING CASSETTE ASSY		1	7
7	588 41 51-03	STARTER ASSY		1	
8	525 82 45-01	SCREW CITXPANMO		4	7
9	588 41 50-01	STARTER HOUSING		1	7
10	537 28 32-01	SLEEVE		1	7,9
11	537 23 25-01	STARTER HANDLE		1	7
12	523 08 32-03	LABEL	XP	1	
12	523 08 32-04	LABEL	XPG	1	

N1 550XP
CARBURETOR DETAILS

AT-7A

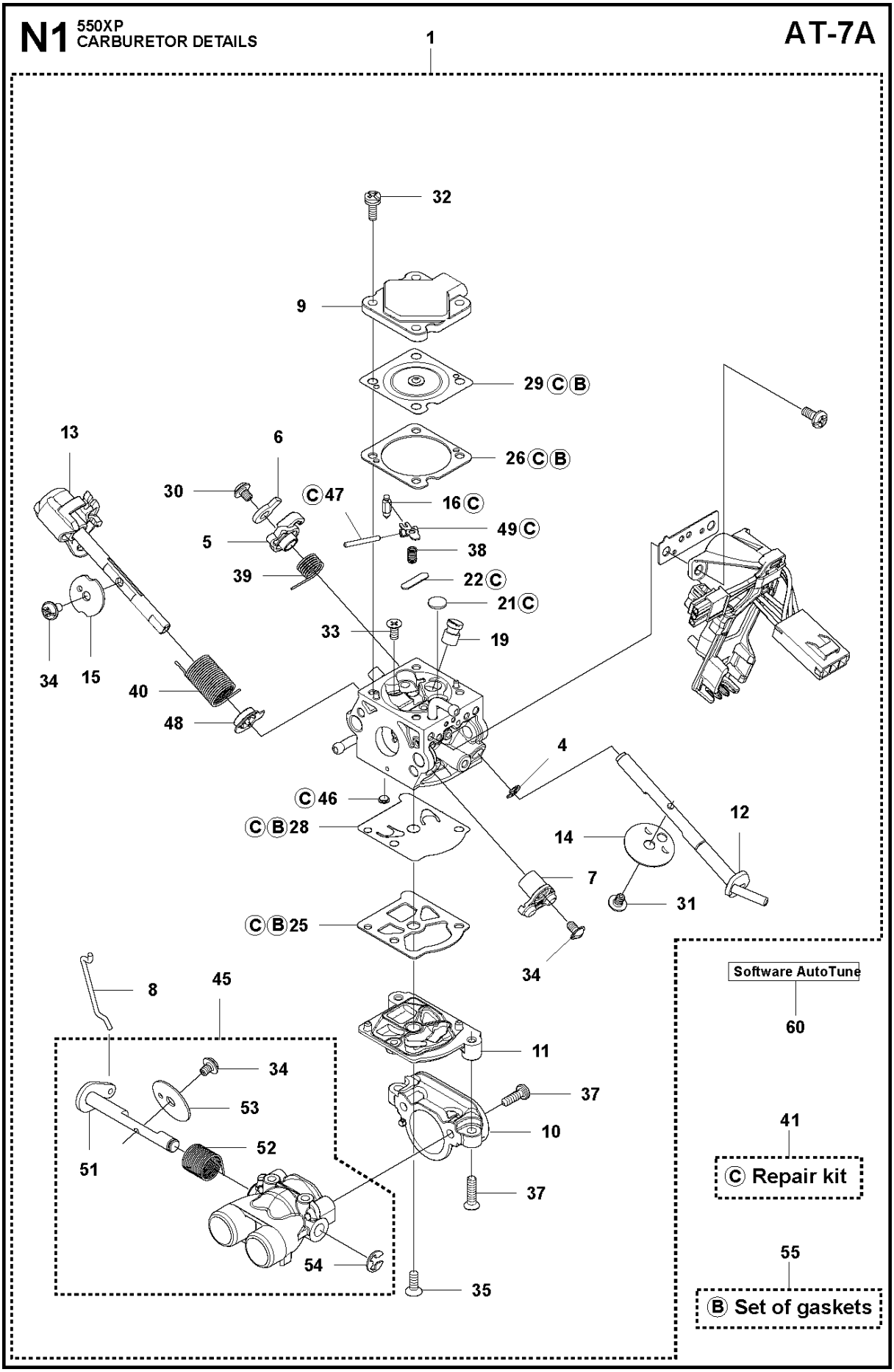

Ref	Part No	Description	Remark	QTY	KIT
4	577 26 29-01	RETAINER		1	1
5	574 35 77-01	LEVER		1	1
6	576 61 85-01	LEVER		1	1
7	577 21 92-01	THROTTLE LEVER ASSY		1	1
8	574 35 79-01	LINK		1	1
9	574 35 81-01	COVER		1	1
10	575 79 48-01	INLET		1	1
11	575 79 47-01	COVER		1	1
12	574 35 84-01	SHAFT ASSY		1	1
13	574 35 82-01	SHAFT		1	1
14	574 35 85-01	VALVE		1	1
15	574 35 75-01	VALVE		1	1
16	503 56 34-01	NEEDLE VALVE		1	1
19	576 61 88-01	NOZZLE ASSY		1	1
21	504 79 08-01	PLUG		1	1
22	502 84 69-01	PLUG		1	1
25	504 13 09-06	GASKET		1	1
26	574 35 86-01	GASKET		1	1
28	577 01 66-01	DIAPHRAGM		1	1
29	574 35 88-01	DIAPHRAGM ASSY		1	1
30	501 46 87-01	SCREW		1	1
31	537 00 34-01	SCREW		1	1
32	537 00 31-01	SCREW		4	1
33	502 84 71-01	SCREW		1	1
34	544 11 15-01	SCREW		2	1
35	574 35 90-01	SCREW		1	1
37	576 61 89-01	SCREW		4	1
38	503 56 24-01	SPRING		1	1
39	574 35 93-01	SPRING		1	1
40	574 35 94-01	SPRING		1	1
41	577 66 61-01	REPAIR KIT		1	
45	579 32 31-01	THROTTLE VALVE ASSY		1	1
46	501 66 61-01	SCREEN		1	1
47	505 52 01-25	PIN		1	1
48	574 35 96-01	BUSHING		1	1
49	502 84 74-01	LEVER		1	1
51	574 35 74-01	SHAFT ASSY		1	1
52	574 35 76-01	SPRING		1	1
53	576 61 90-01	VALVE		1	1
54	505 31 67-36	RING		1	1
55	576 66 65-01	GASKET KIT		1	
60	.	TBD	Download from your local supportsite		

P **550XP**
ACCESSORIES

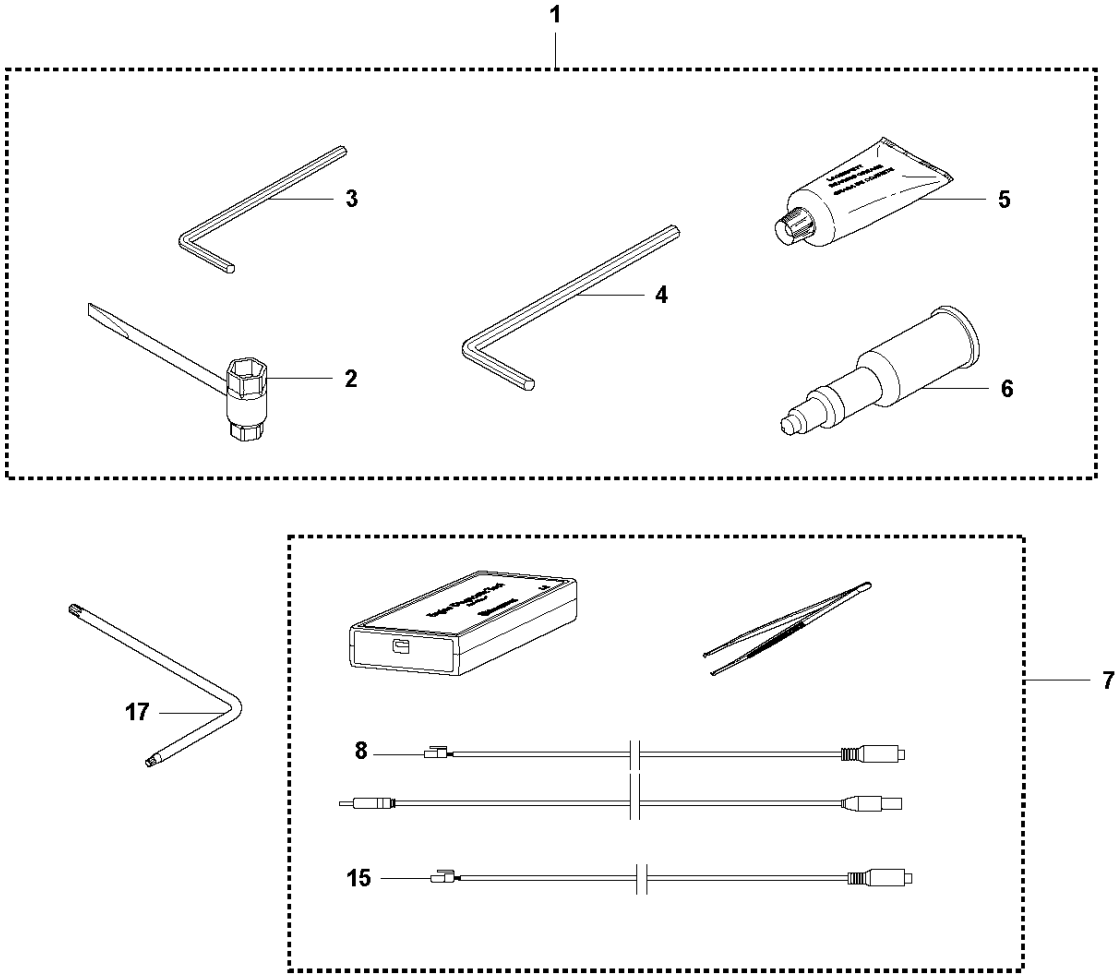

WINTER KIT 550XP

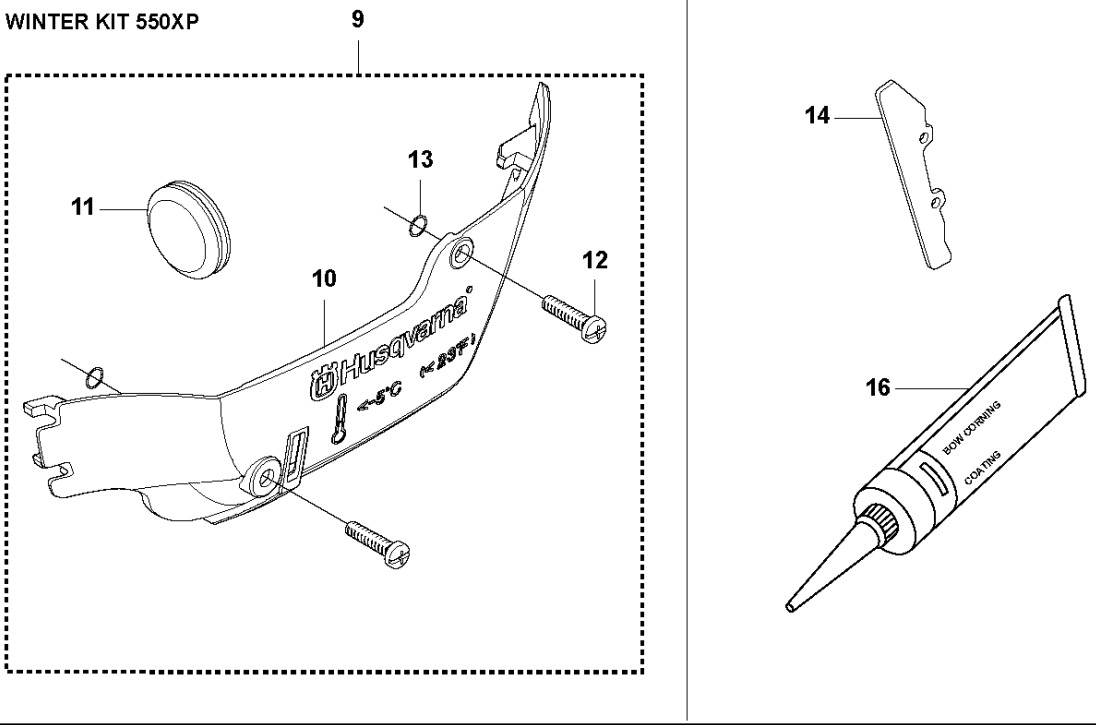

Ref	Part No	Description	Remark	QTY	KIT
1	575 43 92-01	TOOL		1	
2	522 52 11-01	COMBINATION WRENCH		1	1
3	503 55 86-01	SPANNER		1	1
4	503 55 86-02	SPANNER		1	1
5	503 62 12-01	GREASE		1	1
6	501 91 14-01	GREASE GUN		1	1
7	583 89 71-01	DIAGNOSTIC TOOL KIT	Engine diagnostic tool	1	
8	576 18 34-01	CABLE ASSY	Diagnostics cable	1	7
9	522 98 66-01	WINTER KIT		1	
10	525 55 80-02	WINTER COVER		1	9
11	578 12 55-01	WINTER PLUG		1	9
12	503 21 70-16	SCREW CCRPANT		2	9
13	740 42 01-00	O-RING		2	9
14	577 88 72-01	ENCLOSED KIT		1	
15	576 95 22-01	CABLE ASSY	Diagnostics cable 550XP	1	7
16	503 26 72-01	GLUE		1	
17	575 88 07-01	WRENCH	TORX T27/T20	1	

N2 550XP
CARBURETOR DETAILS

AT-12

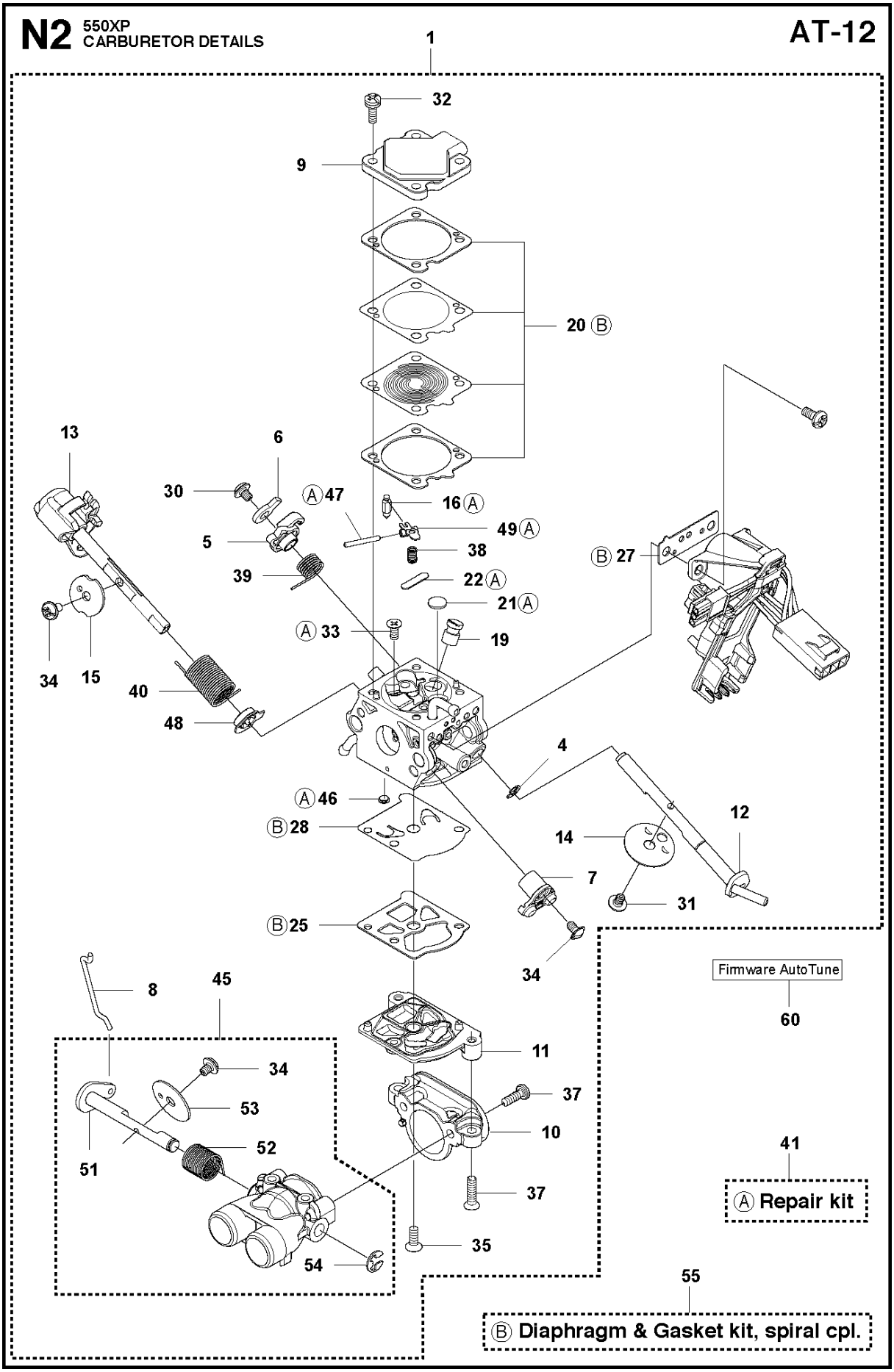

Ref	Part No	Description	Remark	QTY	KIT
1	587 08 48-06	CARBURETTOR KIT	AT-12	1	
4	577 26 29-01	RETAINER		1	1
5	574 35 77-01	LEVER		1	1
6	576 61 85-01	LEVER		1	1
7	577 21 92-01	THROTTLE LEVER ASSY		1	1
8	574 35 79-01	LINK		1	1
9	574 35 81-01	COVER		1	1
10	575 79 48-01	INLET		1	1
11	575 79 47-01	COVER		1	1
12	574 35 84-01	SHAFT ASSY		1	1
13	574 35 82-01	SHAFT		1	1
14	574 35 85-01	VALVE		1	1
15	501 64 95-01	THROTTLE VALVE		1	1
16	503 56 34-01	NEEDLE VALVE		1	1
21	504 79 08-01	PLUG		1	1
22	586 49 71-01	PLUG		1	1
25	504 13 09-06	GASKET		1	1
19	576 61 88-01	NOZZLE ASSY		1	1
20	582 36 64-01	DIAPHRAGM & GASKET KIT		1	1
27	574 35 87-01	GASKET		1	1
28	577 01 66-01	DIAPHRAGM		1	1
30	501 46 87-01	SCREW		1	1
31	537 00 34-01	SCREW		1	1
32	537 00 31-01	SCREW		4	1
33	502 84 71-01	SCREW		1	1
34	544 11 15-01	SCREW		2	1
35	574 35 90-01	SCREW		1	1
37	576 61 89-01	SCREW		4	1
38	503 56 24-01	SPRING		5	1
39	574 35 93-01	SPRING		1	1
40	574 35 94-01	SPRING		1	1
41	582 36 62-01	REPAIR KIT		1	
45	579 32 31-01	THROTTLE VALVE ASSY		1	1
46	501 66 61-01	SCREEN		1	1
47	505 52 01-25	PIN		1	1
48	574 35 96-01	BUSHING		1	1
49	501 64 96-01	LEVER		1	1
51	586 76 74-01	SHAFT ASSY		1	1
52	574 35 76-01	SPRING		1	1
53	576 61 90-01	VALVE		1	1
54	505 31 67-36	RING		1	1
55	582 36 65-01	DIAPHRAGM & GASKET KIT		1	
60	.	TBD	Download from your local supportsite		

Illustrated Parts List - IPL Update

Product Name(s)

H550XP/XPG

Description of change

1. We have introduced a new Starter, assy 588 41 51-03 with improved design for better airflow around the cylinder.
2. New winter cover added in the winter kit that fits both new and old starters.

Comments

This changes is fully exchangeable.

Introduced from

Serial number / Date	***Remark***
S/n 20183900673	Valid for Starter, assy 588 41 51-03.
S/n 20183900673	Valid for Starter housing 588 41 50-01.

IPL updates

Page Title	***Ref. no***	***New part no***	***Name***	***Excl. part no.***	***Remark***
Starter	14	588 41 51-03	Starter, assy	522 74 25-07	
	15	588 41 50-01	Starter housing	522 74 13-04	
Accessories	10	525 55 80-02	Winter cover	525 55 80-01	