PARTS CATALOG

SHAFT HEDGE TRIMMER
HCAS-235ES(37)

1. Cylinder,Piston,Crank Case,Fan Cover

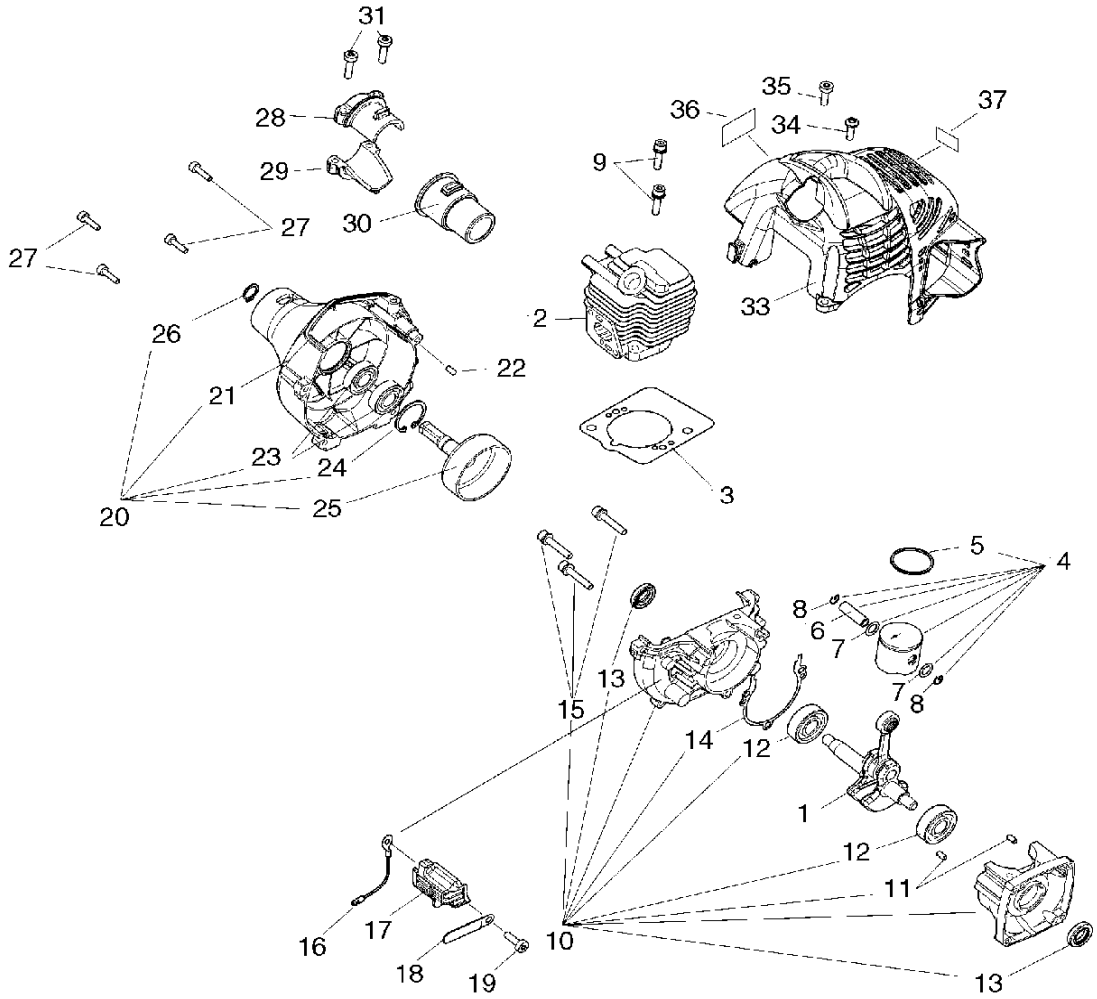

KEY	LV	PART NUMBER	Q'TY	DESCRIPTION	REMARKS	NOTE1	NOTE2
1		A011-000101	1	CRANKSHAFT,ASM			
2		A130-000540	1	CYLINDER			
3		V100-000160	1	GASKET,CYL			
4		P021-007712	1	PISTON KIT			
5	+	A101-000090	1	RING,PISTON			
6	+	100013-11520	1	PIN, PISTON			
7	+	100014-11520	2	SPACER, PISTON PIN			
8	+	100015-04630	2	CIRCLIP, PISTON PIN			
9		900162-05022	2	BOLT, H.S. 5*22	5*22 W,SW		
10		100204-52132	1	CRANKCASE KIT			
11	+	100215-03930	2	PIN, DOWEL			
12	+	94035-36201	2	BEARING BALL	6201X3JR2C3		
13	+	100212-42031	2	OILSEAL	ISCD 12*22*4.5		
14	+	100242-42030	1	GASKET, CRANKCASE			
15	+	900162-05028	3	BOLT, H.S. 5*28	5*28 W,SW		
16		162014-27230	1	LEAD, GROUND			
17		A127-000160	1	COVER,DUST			
18		159116-21231	1	CLAMP			
19		V805-000150	1	BOLT, TORX 5	TB-5*16 10.9		
20		P021-015560	1	COVER,FAN ASSY			
21	+	A172-000860	1	COVER,FAN			
22	+	V622-000020	2	PIN,STRAIGHT 4	4*7.8		
23	+	900807-96001	2	BEARING, BALL 6001	6001		
24	+	900702-00028	1	CIRCLIP 28	CR-28		
25	+	175005-48931	1	DRUM, CLUTCH			

1. Cylinder,Piston,Crank Case,Fan Cover

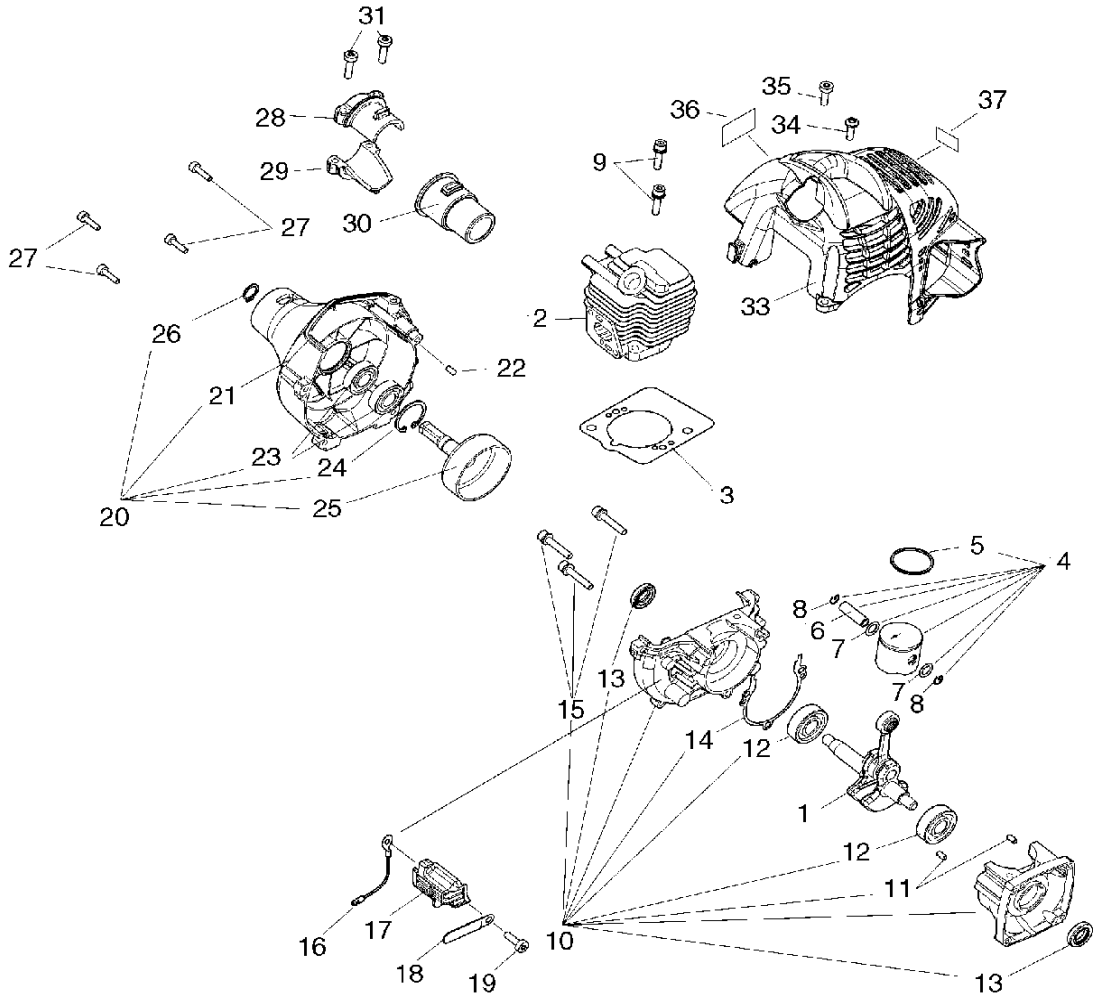

KEY	LV	PART NUMBER	Q'TY	DESCRIPTION	REMARKS	NOTE1	NOTE2
26	+	900701-00012	1	CIRCLIP 12	CS-12		
27		V804-000060	4	BOLT, TORX 4	TB-4*16 10.9		
28		610922-27432	1	HOLDER			
29		610923-55230	1	HOLDER			
30		610910-55230	1	CUSHION			
31		V805-000160	2	BOLT, TORX 5	TB-5*20 10.9		
33		A160-001090	1	COVER,CYLINDER			
34		V805-000000	1	BOLT, TORX 5	TT-5*16 DG 10.9		
35		V805-000150	1	BOLT, TORX 5	TB-5*16 10.9		
36		X547-001560	1	LABEL,ECHO	HCAS-235ES		
37		X505-002310	1	LABEL,CAUTION	HOT CAUTION		

2. Magneto, Recoil Starter

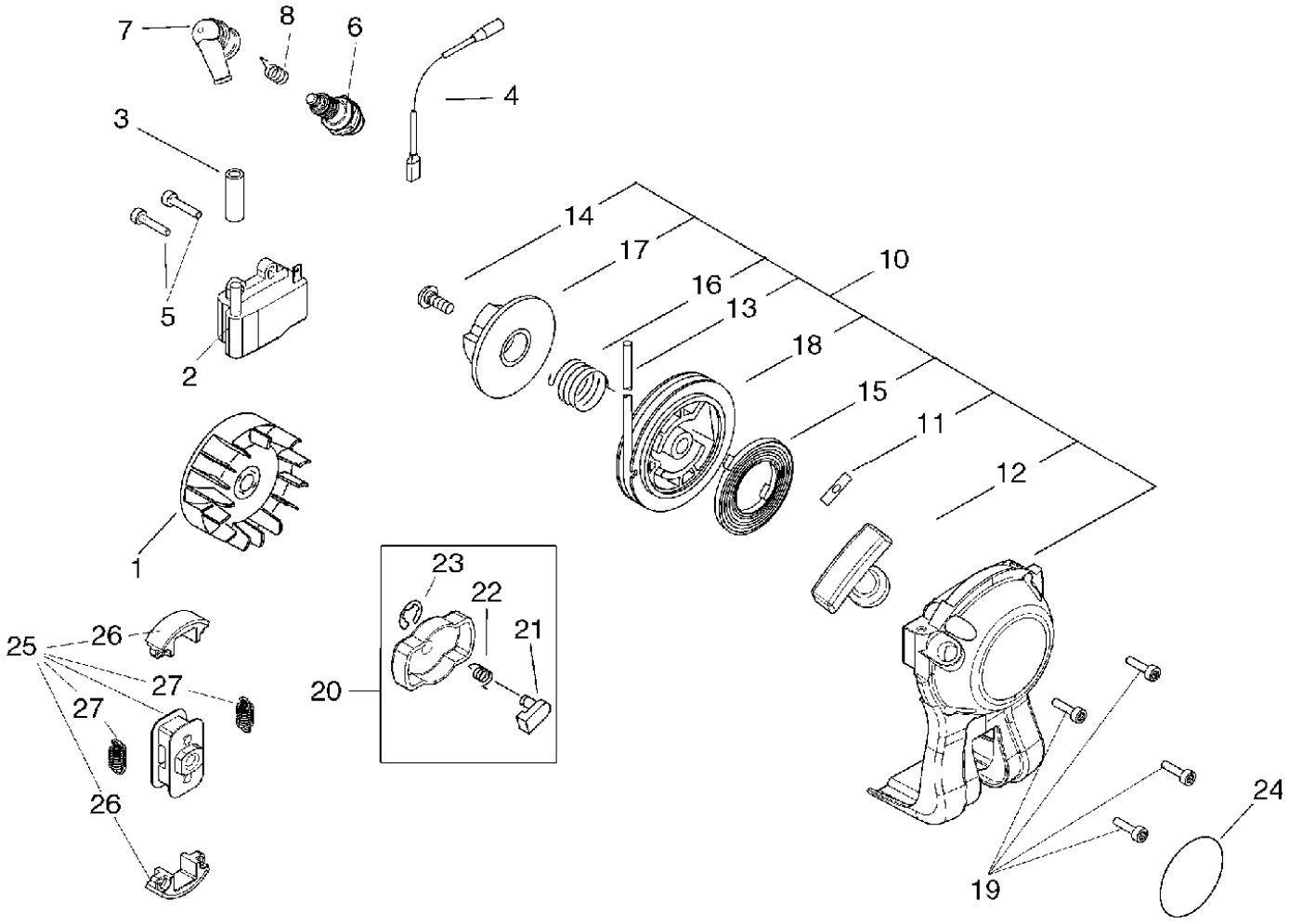

KEY	LV	PART NUMBER	Q'TY	DESCRIPTION	REMARKS	NOTE1	NOTE2
1		A409-000210	1	ROTOR,MAGNETO			
2		A411-000130	1	COIL,IGNITION			
3		V475-004160	1	TUBE	7*8.6*65 HST-10		
4		V485-001120	1	LEAD	L210 #187 CB104		
5		V804-000070	2	BOLT, TORX 4	TB-4*20 12.9		
6		A425-000000	1	SPARKPLUG	BPMR8Y		
7		A427-000013	1	CAP,SPARK PLUG			
8		A426-000010	1	TERMINAL,SPARKPLUG			
10		A051-001311	1	STARTER,RECOIL ASY			
11	+	177246-11120	1	CLIP, STARTER ROPE			
12	+	177228-27030	2	GRIP, STARTER			
13	+	P022-019990	2	ROPE, STARTER			
14	+	177236-61830	1	SCREW			
15	+	P022-019680	1	SPRING, SPIRAL			
16	+	P022-008270	1	SPRING,DAMPER			
17	+	P022-008280	1	PLATE, CAM			
18	+	P022-006830	1	DRUM			
19		V804-000060	4	BOLT, TORX 4	TB-4*16 10.9		
20		A052-000180	1	PULLEY,ASM STARTER			
21	+	P022-006850	2	PAWL, STARTER			
22	+	P022-006510	2	SPRING, RETURN			
23	+	P022-002100	2	E-RING	4		
24		X502-000330	1	LABEL,ECHO	ECHO		
25		A056-000230	1	CLUTCH ASY			

2. Magneto, Recoil Starter

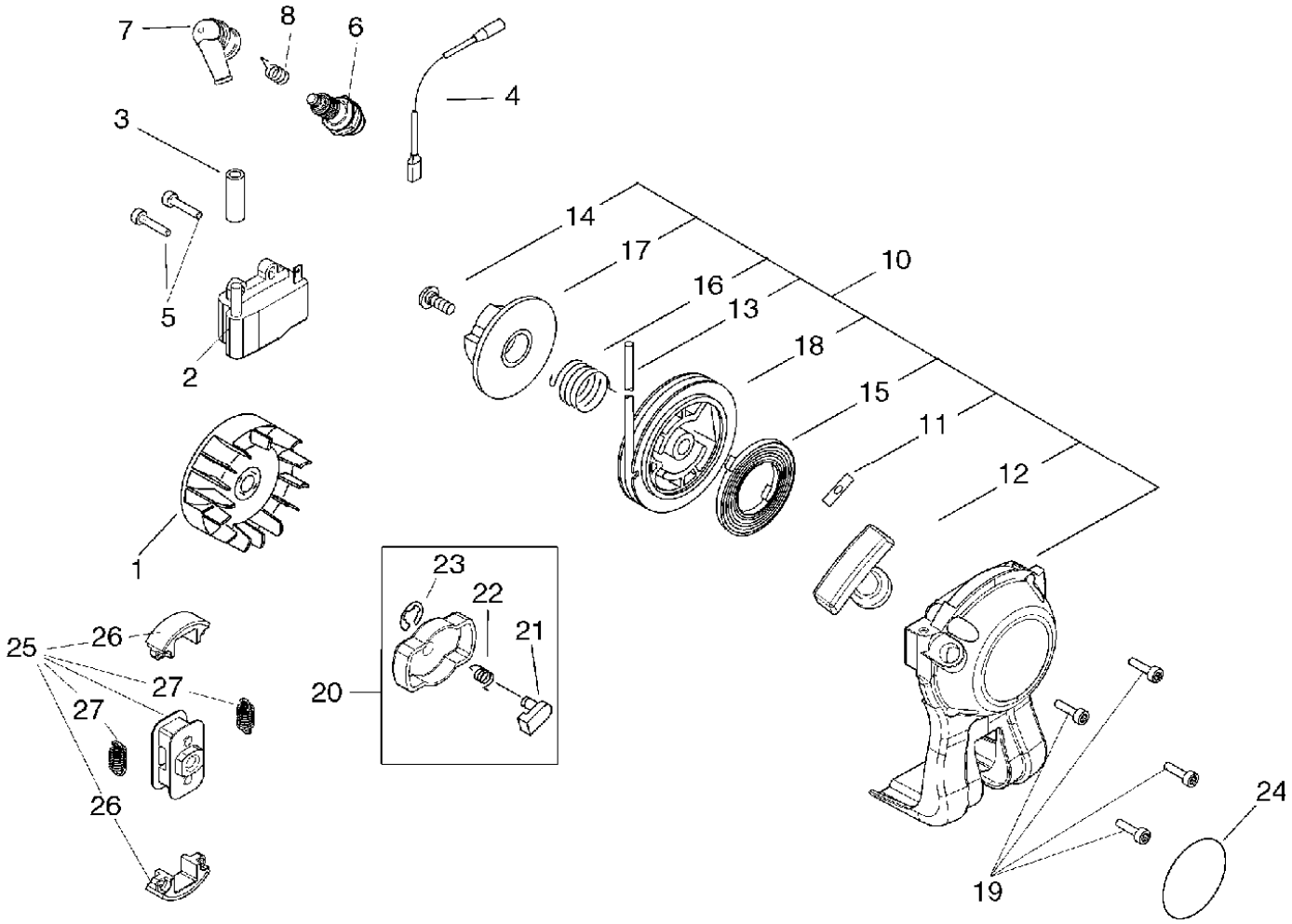

KEY	LV	PART NUMBER	Q'TY	DESCRIPTION	REMARKS	NOTE1	NOTE2
26	+	175009-05131	2	SHOE, CLUTCH			
27	+	175018-05960	2	SPRING, CLUTCH			

3. Air Cleaner, Muffler

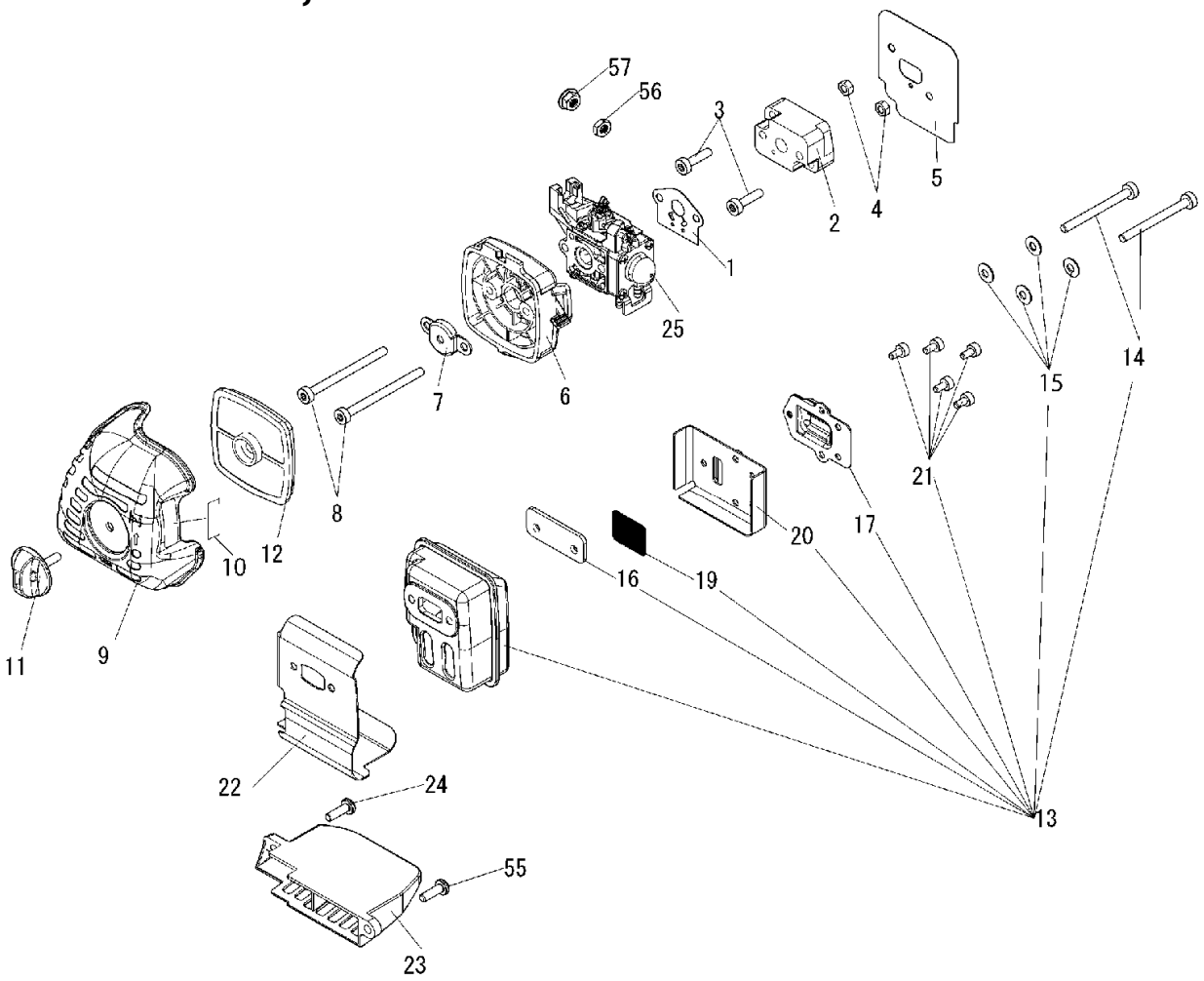

KEY	LV	PART NUMBER	Q'TY	DESCRIPTION	REMARKS	NOTE1	NOTE2
1		V103-000480	1	GASKET,INTAKE	ASK4602		
2		130017-44331	1	INSULATOR			
3		V805-000160	2	BOLT, TORX 5	TB-5*20 10.9		
4		900500-00005	2	NUT 5	5		
5		V103-000490	1	GASKET,INTAKE	NP4200		
6		P021-012870	1	CLEANER CASE ASY			
7		129011-52730	1	PLATE, PREVENT			
8		V805-000100	2	BOLT, TORX 5	TB-5*65 10.9		
9		A232-000480	1	LID,CLEANER			
10		890332-52730	1	LABEL, CHOKE			
11		V299-000250	1	KNOB,FASTENER			
12		130310-54130	1	FILTER, AIR			
13		P021-015580	1	MUFFLER ASY			
14	+	V805-000190	2	BOLT, TORX 5	TB-5*55 12.9		
15	+	V347-000000	4	WASHER,CONICAL			
16	+	V150-000371	1	PLATE,EYE			
17	+	A313-000600	1	GUIDE,EXH			
19	+	145862-40630	1	SCREEN, MUFFLER			
20	+	V104-000360	1	GASKET,EXHAUST			
21	+	V804-000080	5	BOLT, TORX 4	TB4*8		
22		V104-000850	1	GASKET,EXHAUST	T1.0		
23		A320-000480	1	COVER,MUFFLER			
24		V805-000000	1	BOLT, TORX 5	TT-5*16 DG 10.9		
25		A021-001690	1	CARBURETOR,DIAPHRAGM	ZAMA RB-X1746		

3. Air Cleaner, Muffler

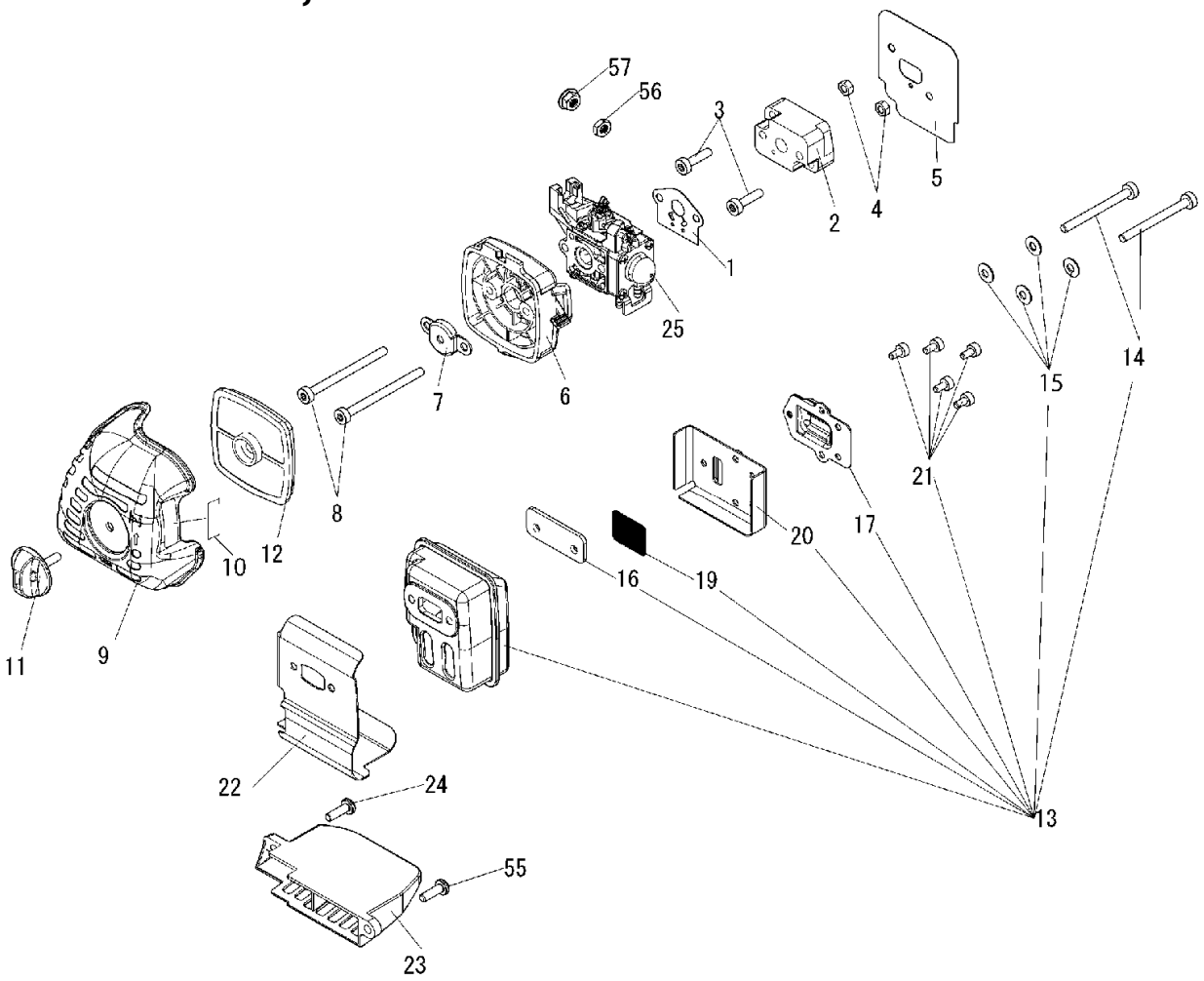

KEY	LV	PART NUMBER	Q'TY	DESCRIPTION	REMARKS	NOTE1	NOTE2
55		V805-000150	1	BOLT, TORX 5	TB-5*16 10.9		
56		900502-00006	1	NUT 6 (3N)	3N6		
57		900515-00006	1	NUT, FLANGE 6	6		

4. Fuel Tank

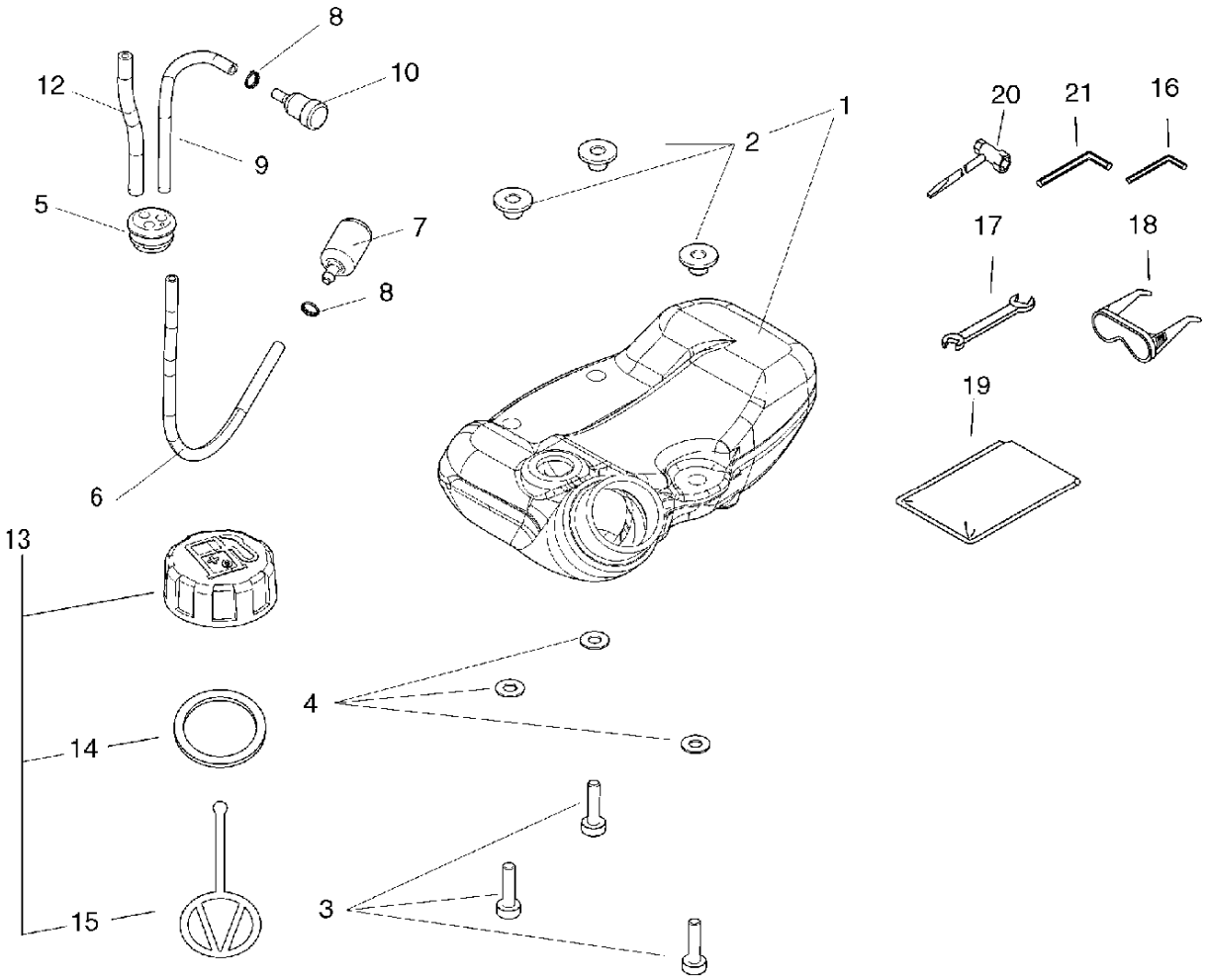

KEY	LV	PART NUMBER	Q'TY	DESCRIPTION	REMARKS	NOTE1	NOTE2
1		A350-000830	1	TANK, FUEL			
2	+	V353-000231	3	COLLAR,5	16*5.5 L6 T2		
3		V805-000160	3	BOLT, TORX 5	TB-5*20 10.9		
4		900603-00005	3	WASHER 5	5.5*12*0.8		
5		V137-000030	1	GROMMET,FUEL			
6		V471-001230	1	PIPE	3*5*210 NBR		
7		131205-07320	1	STRAINER, FUEL			
8		132013-09820	2	CLIP	6MM		
9		V471-001210	1	PIPE	3*5*90 NBR		
10		A356-000030	1	VALVE,CHECK			
12		132012-56030	1	PIPE	3*6*80 YL		
13		P021-012210	1	CAP,FUEL ASY			
14	+	131016-55830	1	GASKET, FUEL CAP			
15	+	A365-000060	1	CONNECTOR,CAP	L=123		
16		X605-000060	1	TOOL,L WRENCH	80*30 T27 2-ENDS		
17		895112-00330	1	SPANNER 8*10			
18		X690-000050	1	GOGGLE	GOGGLE + NOTE		
19		898510-07130	1	BAG, TOOL			
20		895410-03930	1	WRENCH, W/S. DRIVER			
21		895610-00130	1	L-WRENCH (4MM)			

5. Handle

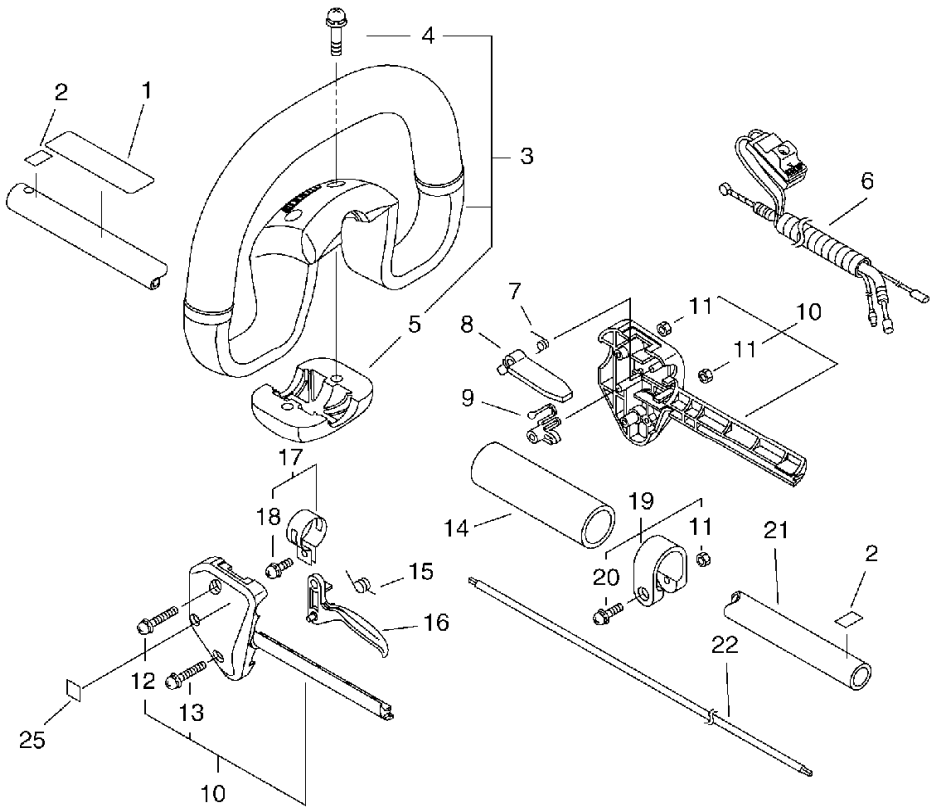

KEY	LV	PART NUMBER	Q'TY	DESCRIPTION	REMARKS	NOTE1	NOTE2
1		890617-12361	1	LABEL, CAUTION			
2		890152-04930	2	LABEL, CAUTION			
3		P021-008322	1	FRONT HANDLE ASY			
4	+	900242-05040	2	SCREW 5*40	5*40		
5	+	C423-000190	1	FIXTURE,HANDLE			
6		V043-000310	1	CABLE ASY, CONTROL			
7		178013-52630	1	SPRING, THR. LOCK			
8		178090-52632	1	LOCKOUT, T. CONTROL			
9		178012-52730	1	LOCKOUT, THROTTLE			
10		178003-52130	1	BRACKET SET,THROTTLE			
11	+	900500-00005	2	NUT 5	5		
12	+	900242-05035	1	SCREW 5*35	5*35		
13	+	900242-05025	1	SCREW 5*25	5*25		
14		351213-52130	1	GRIP			
15		178043-42230	1	SPRING, THR. RETURN			
16		178010-52130	1	CONTROL, THROTTLE			
17		301200-29430	1	BAND ASSY			
18	+	900242-05014	1	SCREW 5*14	5*14		
19		P021-014550	1	BAND 25			
11	+	900500-00005	1	NUT 5	5		
20	+	900242-05028	1	SCREW 5*28	5*28		
21		C050-000350	1	PIPE ASY, MAIN	25*844MM		
22		610013-21560	1	SHAFT, FLEXIBLE			
25		890157-39130	1	LABEL, SWITCH			

6. Gear Case

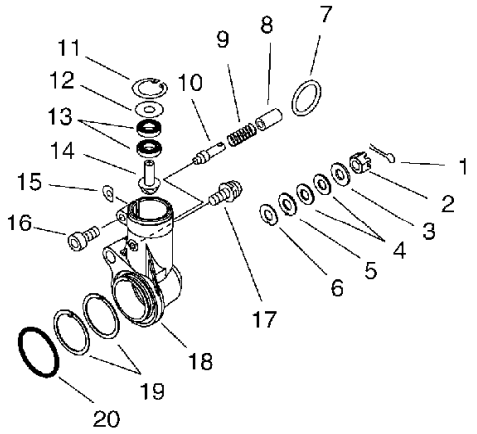

KEY	LV	PART NUMBER	Q'TY	DESCRIPTION	REMARKS	NOTE1	NOTE2
		P021-010520	1	CASE ASY, GEAR			
1	+	93000-16180	1	PIN SPLIT	P-1.6*18		
2	+	900529-00008	1	NUT, SLOTT 8			
3	+	V306-000140	1	WASHER,CIRCULAR 8			
4	+	V347-000010	2	WASHER,CONICAL			
5	+	V340-000110	1	WASHER			
6	+	V110-000040	1	GASKET,GEAR CASE	CIRCULAR 17MM OD		
7	+	V583-000050	1	RING			
8	+	V355-000310	1	COLLAR,8			
9	+	V450-000420	1	SPRING,COMPRESSION			
10	+	V642-000020	1	PIN,LINCH			
11	+	900702-00022	1	CIRCLIP 22	CR-22		
12	+	V583-000060	1	RING			
13	+	900859-06900	2	BEARING, BALL 6900	6900		
14	+	V651-000240	1	GEAR,BEVEL	12 TEETH		
15	+	V340-000170	1	WASHER			
16	+	900162-05025	1	BOLT, H.S. 5*25	5*25 W,SW		
17	+	900242-05012	1	SCREW 5*12	5*12		
18	+	C531-000292	1	CASE,GEAR			
19	+	V340-000120	2	WASHER			
20	+	900724-00032	1	O-RING	S-32		

7. Cutter

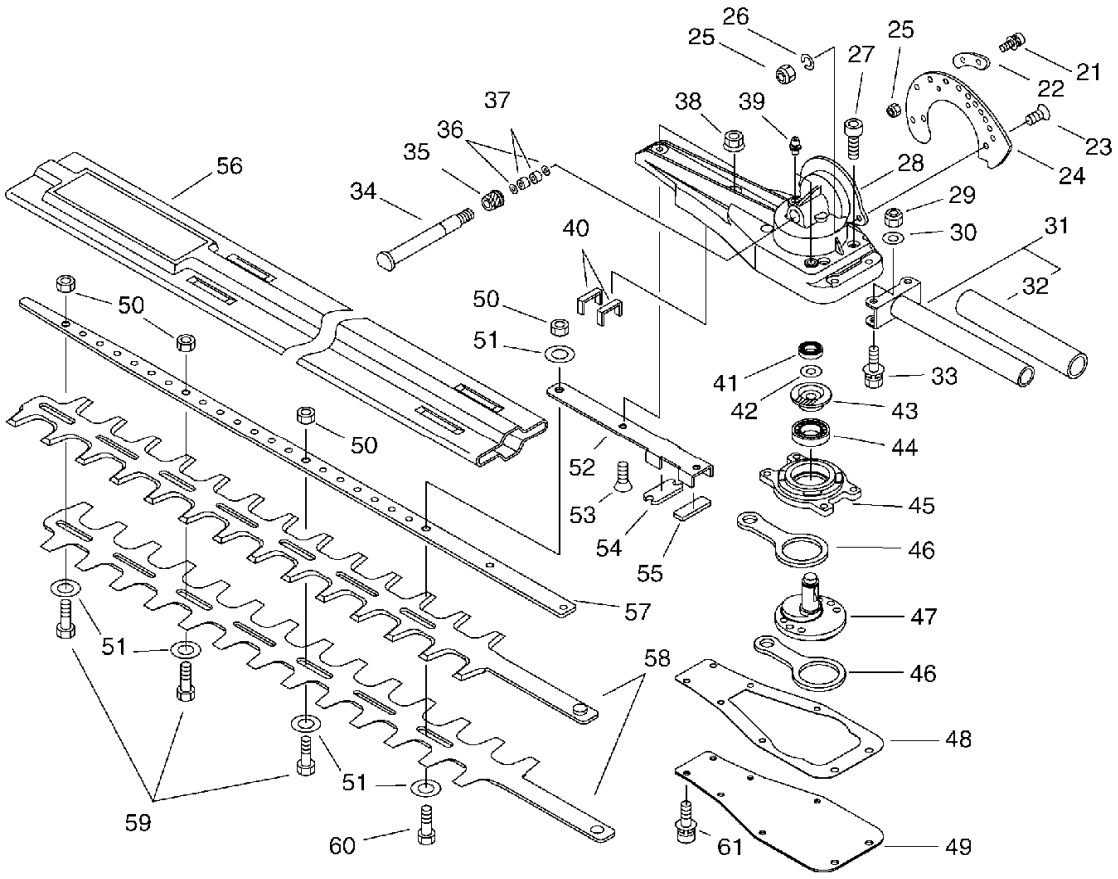

KEY	LV	PART NUMBER	Q'TY	DESCRIPTION	REMARKS	NOTE1	NOTE2
21	+	900162-04012	2	BOLT, H.S. 4*12	4*12 W,SW		
22	+	C629-000020	1	STOPPER, ROTATION			
23	+	900212-04012	2	SCREW 4*12	+SF4*12		
24	+	C465-000010	1	RESETTER, LATCH			
25	+	900560-00004	4	LOCKNUT	4		
26	+	900605-00004	2	WASHER, SPRING 4	4		
27	+	900105-05008	4	BOLT, H.S. 5*8	5*8		
28	+	C531-000302	1	CASE,GEAR	DRIVEN SIDE		
29	+	900560-00005	2	NUT, LOCK 5	5		
30	+	900600-00005	2	WASHER 5	5		
31	+	351305-12360	1	HANDLE			
32	++	351315-12360	1	GRIP, HANDLE	19*135		
33	+	900142-05028	2	BOLT 5*28 (W/W,SW)	5*28		
34	+	C534-000260	1	SHAFT,GEAR			
35	+	V651-000250	1	GEAR,BEVEL	25 TEETH		
36	+	V307-000150	2	WASHER,CIRCULAR 10	10.2*15.5*T=1		
37	+	V555-000040	2	BEARING,NEEDLE 10			
38	+	900516-00005	2	NUT, FRANGE 5	5		
39	+	880110-10860	2	NIPPLE, GREASE			
40	+	V541-000130	2	SEAL			
41	+	900855-06900	1	BEARING, BALL 6900	6900		
42	+	V583-000040	1	RING			
43	+	V651-000260	1	GEAR,BEVEL	35 TEETH		
44	+	900800-06001	1	BEARING, BALL 6001	6001		

7. Cutter

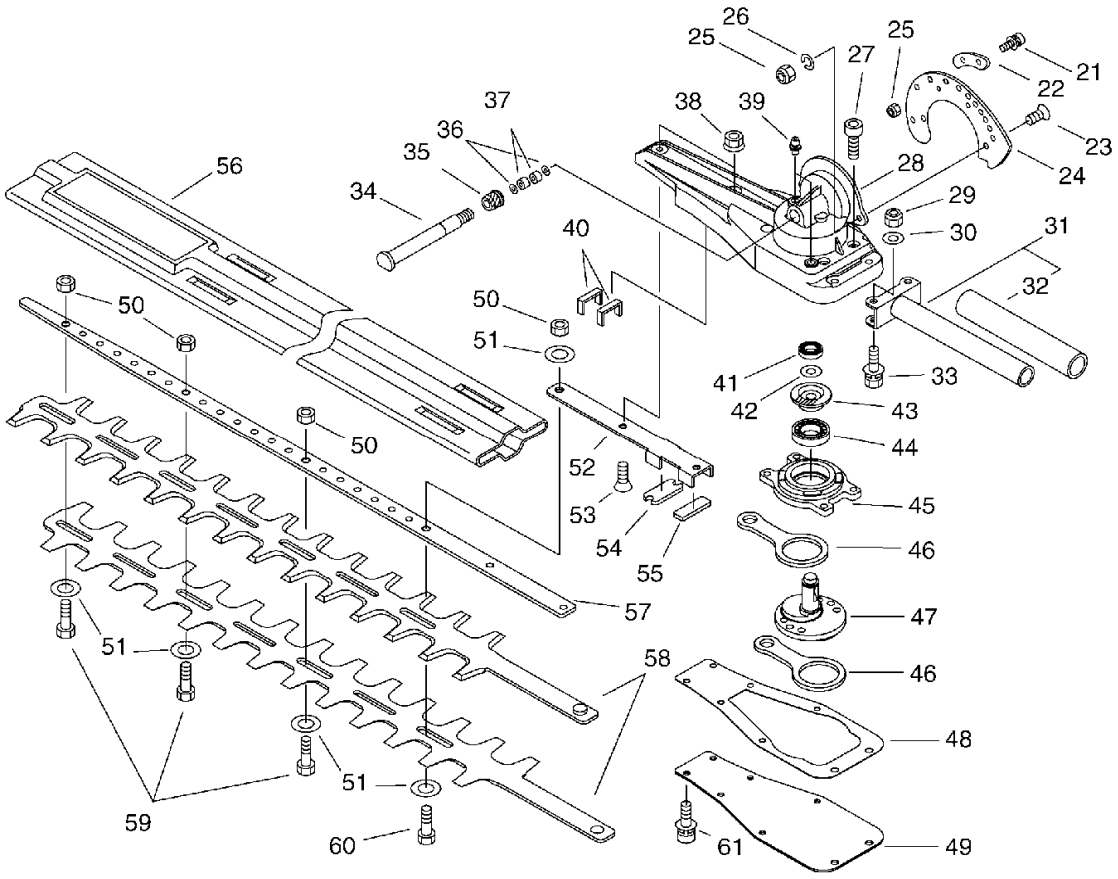

KEY	LV	PART NUMBER	Q'TY	DESCRIPTION	REMARKS	NOTE1	NOTE2
45	+	C503-000072	1	HOLDER,BEARING	28 BEARING SEAT		
46	+	C532-000140	2	ROD, CONNECTING	YAMASAKI		
47	+	C533-000041	1	CAM	HCA		
48	+	V110-000051	1	GASKET,GEAR CASE	HCA GEARCASE LID		
49	+	C539-000010	1	LID,GEARCASE	HCA-260 G.C.		
50	+	433022-06460	4	NUT			
51	+	699118-04560	5	WASHER			
52	+	C538-000120	1	GUIDE,CUTTER			
53	+	900212-05020	2	SCREW 5*20	+SF5*20		
54	+	C538-000110	1	GUIDE,CUTTER			
55	+	C538-000100	1	GUIDE,CUTTER			
56	+	X495-000200	1	SCABBARD,BLADE	L=540 (HCAS2200)		
57	+	X425-000220	1	SUPPORT,CUTTER	T=3.0		
58	+	X411-000350	2	CUTTER	L= 570		
59	+	699115-04660	3	BOLT 6	6*18L		
60	+	699115-07760	1	BOLT, CUTTER			
61	+	900162-04014	6	BOLT, H.S. 4*14	4*14 W,SW		

8. Carburettor

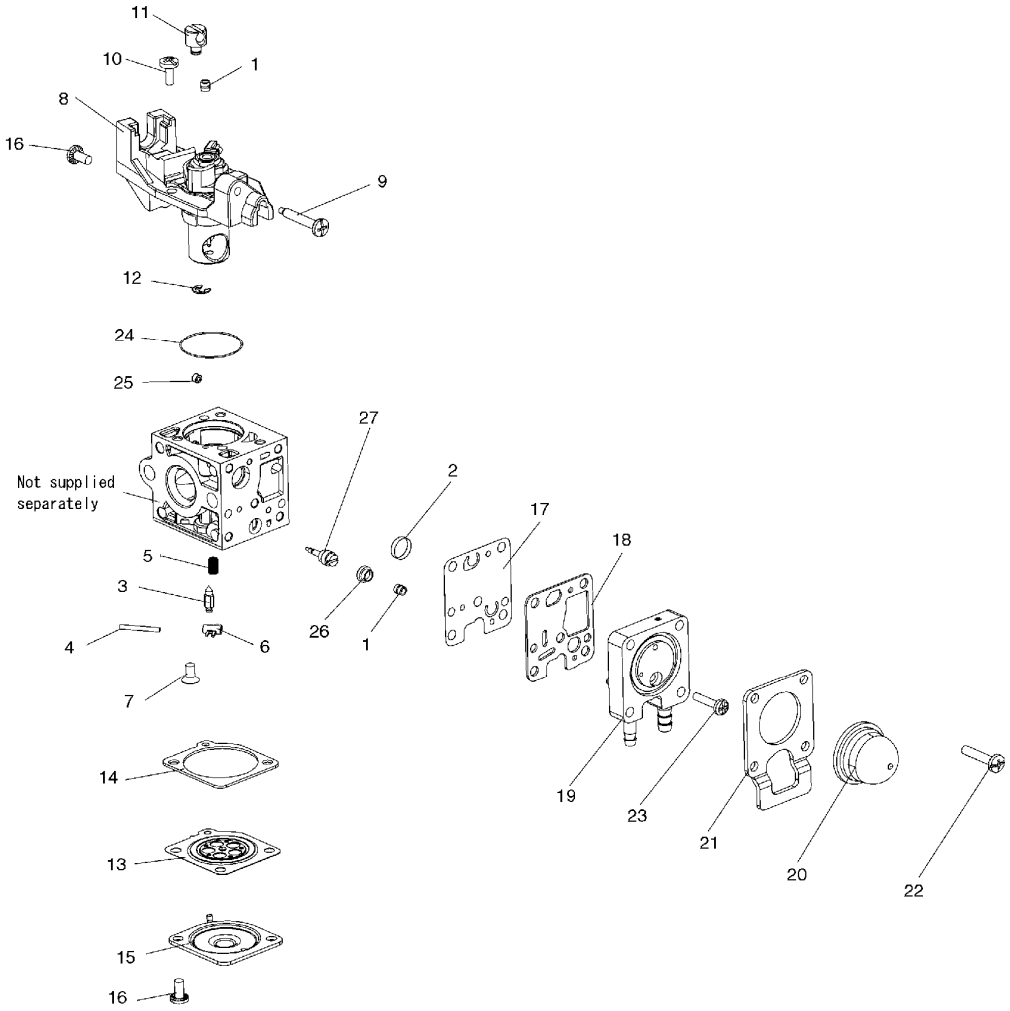

KEY	LV	PART NUMBER	Q'TY	DESCRIPTION	REMARKS	NOTE1	NOTE2
		A021-001690	1	CARBURETOR,DIAPHRAGM	ZAMA RB-X1746		
1	+	A259-000010	2	CAP,LIMITER			
2	+	P005-000010	1	STRAINER			
3	+	125337-08260	1	VALVE, INLET NEEDLE			
4	+	125338-13930	1	PIN, METERING ARM			
5	+	P005-000940	1	SPRING, METER. LEVER			
6	+	125323-08260	1	ARM, VALVE			
7	+	125339-42030	1	SCREW			
8	+	P005-002050	1	COVER ASY, ROTOR			
9	+	P005-000100	1	SCREW,THROTTLEADJUST			
10	+	125344-13931	3	SCREW			
11	+	P005-001240	1	POST			
12	+	P005-000190	1	E-RING			
13	+	P005-001780	1	DIAPHRAGM			
14	+	P005-000200	1	GASKET, METERING			
15	+	125342-52130	1	COVER, DIAPHRAGM			
16	+	125344-52130	3	SCREW			
17	+	P005-000510	1	DIAPHRAGM, PUMP			
18	+	P005-000520	1	GASKET, PUMP			
19	+	P005-001890	1	BASE, ASY PRIMER			
20	+	125381-46730	1	PUMP, PRIMING			
21	+	P005-000250	1	RETAINER			
22	+	P005-001900	4	SCREW			
23	+	P005-000270	1	SCREW			
24	+	P005-000280	1	O-RING			

8. Carburettor

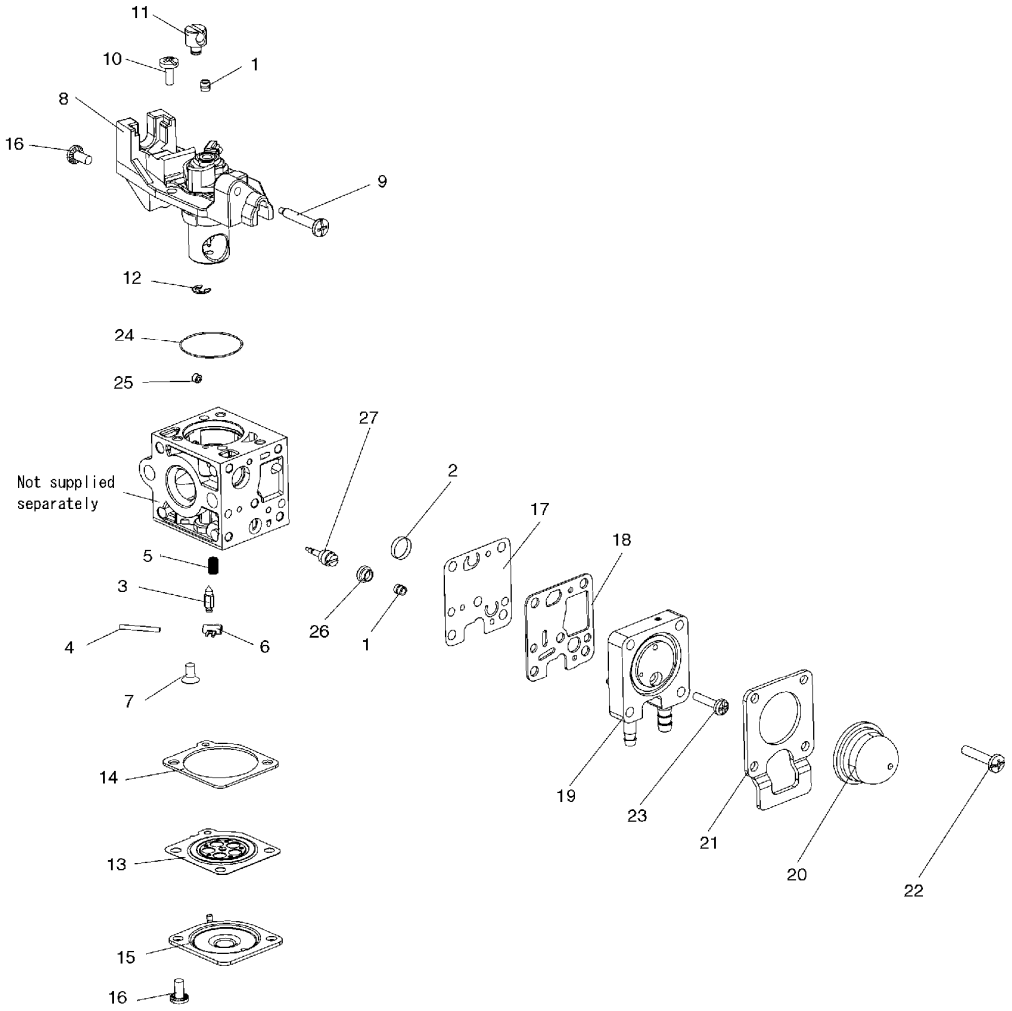

KEY	LV	PART NUMBER	Q'TY	DESCRIPTION	REMARKS	NOTE1	NOTE2
25	+	P005-001000	1	ROLLER, GUIDE			
26	+	P005-001250	1	RETAINER,PLUG BALL			
27	+	P005-001260	1	SCREW,MAINN MIXTURE			

Index

Patrs Number	Key No.	Patrs Number	Key No.	Patrs Number	Key No.
100013-11520	1 - 6	880110-10860	7 - 39	A051-001311	2 - 10
100014-11520	1 - 7	890152-04930	5 - 2	A052-000180	2 - 20
100015-04630	1 - 8	890157-39130	5 - 25	A056-000230	2 - 25
100204-52132	1 - 10	890332-52730	3 - 10	A101-000090	1 - 5
100212-42031	1 - 13	890617-12361	5 - 1	A127-000160	1 - 17
100215-03930	1 - 11	895112-00330	4 - 17	A130-000540	1 - 2
100242-42030	1 - 14	895410-03930	4 - 20	A160-001090	1 - 33
125323-08260	8 - 6	895610-00130	4 - 21	A172-000860	1 - 21
125337-08260	8 - 3	898510-07130	4 - 19	A232-000480	3 - 9
125338-13930	8 - 4	900105-05008	7 - 27	A259-000010	8 - 1
125339-42030	8 - 7	900142-05028	7 - 33	A313-000600	3 - 17
125342-52130	8 - 15	900162-04012	7 - 21	A320-000480	3 - 23
125344-13931	8 - 10	900162-04014	7 - 61	A350-000830	4 - 1
125344-52130	8 - 16	900162-05022	1 - 9	A356-000030	4 - 10
125381-46730	8 - 20	900162-05025	6 - 16	A365-000060	4 - 15
129011-52730	3 - 7	900162-05028	1 - 15	A409-000210	2 - 1
130017-44331	3 - 2	900212-04012	7 - 23	A411-000130	2 - 2
130310-54130	3 - 12	900212-05020	7 - 53	A425-000000	2 - 6
131016-55830	4 - 14	900242-05012	6 - 17	A426-000010	2 - 8
131205-07320	4 - 7	900242-05014	5 - 18	A427-000013	2 - 7
132012-56030	4 - 12	900242-05025	5 - 13	C050-000350	5 - 21
132013-09820	4 - 8	900242-05028	5 - 20	C423-000190	5 - 5
145862-40630	3 - 19	900242-05035	5 - 12	C465-000010	7 - 24
159116-21231	1 - 18	900242-05040	5 - 4	C503-000072	7 - 45
162014-27230	1 - 16	900500-00005	3 - 4	C531-000292	6 - 18
175005-48931	1 - 25	900500-00005	5 - 11	C531-000302	7 - 28
175009-05131	2 - 26	900500-00005	5 - 11	C532-000140	7 - 46
175018-05960	2 - 27	900502-00006	3 - 56	C533-000041	7 - 47
177228-27030	2 - 12	900515-00006	3 - 57	C534-000260	7 - 34
177236-61830	2 - 14	900516-00005	7 - 38	C538-000100	7 - 55
177246-11120	2 - 11	900529-00008	6 - 2	C538-000110	7 - 54
178003-52130	5 - 10	900560-00004	7 - 25	C538-000120	7 - 52
178010-52130	5 - 16	900560-00005	7 - 29	C539-000010	7 - 49
178012-52730	5 - 9	900600-00005	7 - 30	C629-000020	7 - 22
178013-52630	5 - 7	900603-00005	4 - 4	P005-000010	8 - 2
178043-42230	5 - 15	900605-00004	7 - 26	P005-000100	8 - 9
178090-52632	5 - 8	900701-00012	1 - 26	P005-000190	8 - 12
301200-29430	5 - 17	900702-00022	6 - 11	P005-000200	8 - 14
351213-52130	5 - 14	900702-00028	1 - 24	P005-000250	8 - 21
351305-12360	7 - 31	900724-00032	6 - 20	P005-000270	8 - 23
351315-12360	7 - 32	900800-06001	7 - 44	P005-000280	8 - 24
433022-06460	7 - 50	900807-96001	1 - 23	P005-000510	8 - 17
610013-21560	5 - 22	900855-06900	7 - 41	P005-000520	8 - 18
610910-55230	1 - 30	900859-06900	6 - 13	P005-000940	8 - 5
610922-27432	1 - 28	93000-16180	6 - 1	P005-001000	8 - 25
610923-55230	1 - 29	94035-36201	1 - 12	P005-001240	8 - 11
699115-04660	7 - 59	A011-000101	1 - 1	P005-001250	8 - 26
699115-07760	7 - 60	A021-001690	3 - 25	P005-001260	8 - 27
699118-04560	7 - 51	A021-001690	8 -	P005-001780	8 - 13

Index

Patrs Number	Key No.
P005-001890	8 - 19
P005-001900	8 - 22
P005-002050	8 - 8
P021-007712	1 - 4
P021-008322	5 - 3
P021-010520	6 -
P021-012210	4 - 13
P021-012870	3 - 6
P021-014550	5 - 19
P021-015560	1 - 20
P021-015580	3 - 13
P022-002100	2 - 23
P022-006510	2 - 22
P022-006830	2 - 18
P022-006850	2 - 21
P022-008270	2 - 16
P022-008280	2 - 17
P022-019680	2 - 15
P022-019990	2 - 13
V043-000310	5 - 6
V100-000160	1 - 3
V103-000480	3 - 1
V103-000490	3 - 5
V104-000360	3 - 20
V104-000850	3 - 22
V110-000040	6 - 6
V110-000051	7 - 48
V137-000030	4 - 5
V150-000371	3 - 16
V299-000250	3 - 11
V306-000140	6 - 3
V307-000150	7 - 36
V340-000110	6 - 5
V340-000120	6 - 19
V340-000170	6 - 15
V347-000000	3 - 15
V347-000010	6 - 4
V353-000231	4 - 2
V355-000310	6 - 8
V450-000420	6 - 9
V471-001210	4 - 9
V471-001230	4 - 6
V475-004160	2 - 3
V485-001120	2 - 4
V541-000130	7 - 40
V555-000040	7 - 37
V583-000040	7 - 42
V583-000050	6 - 7
V583-000060	6 - 12
V622-000020	1 - 22
V642-000020	6 - 10
V651-000240	6 - 14
V651-000250	7 - 35
V651-000260	7 - 43
V804-000060	1 - 27
V804-000060	2 - 19
V804-000070	2 - 5
V804-000080	3 - 21
V805-000000	1 - 34
V805-000000	3 - 24
V805-000100	3 - 8
V805-000150	1 - 19
V805-000150	1 - 35
V805-000150	3 - 55
V805-000160	1 - 31
V805-000160	3 - 3
V805-000160	4 - 3
V805-000190	3 - 14
X411-000350	7 - 58
X425-000220	7 - 57
X495-000200	7 - 56
X502-000330	2 - 24
X505-002310	1 - 37
X547-001560	1 - 36
X605-000060	4 - 16
X690-000050	4 - 18

Patrs Number	Key No.

YAMABIKO CORPORATION

7-2 SUEHIROCHO 1-CHOME, OHME, TOKYO 198-8760, JAPAN
PHONE: 81-428-32-6118. FAX: 81-428-32-6145.



©2012 YAMABIKO CORPORATION